Al Fareed Stars Factory Co.

For Metal Industries and Cable Support System

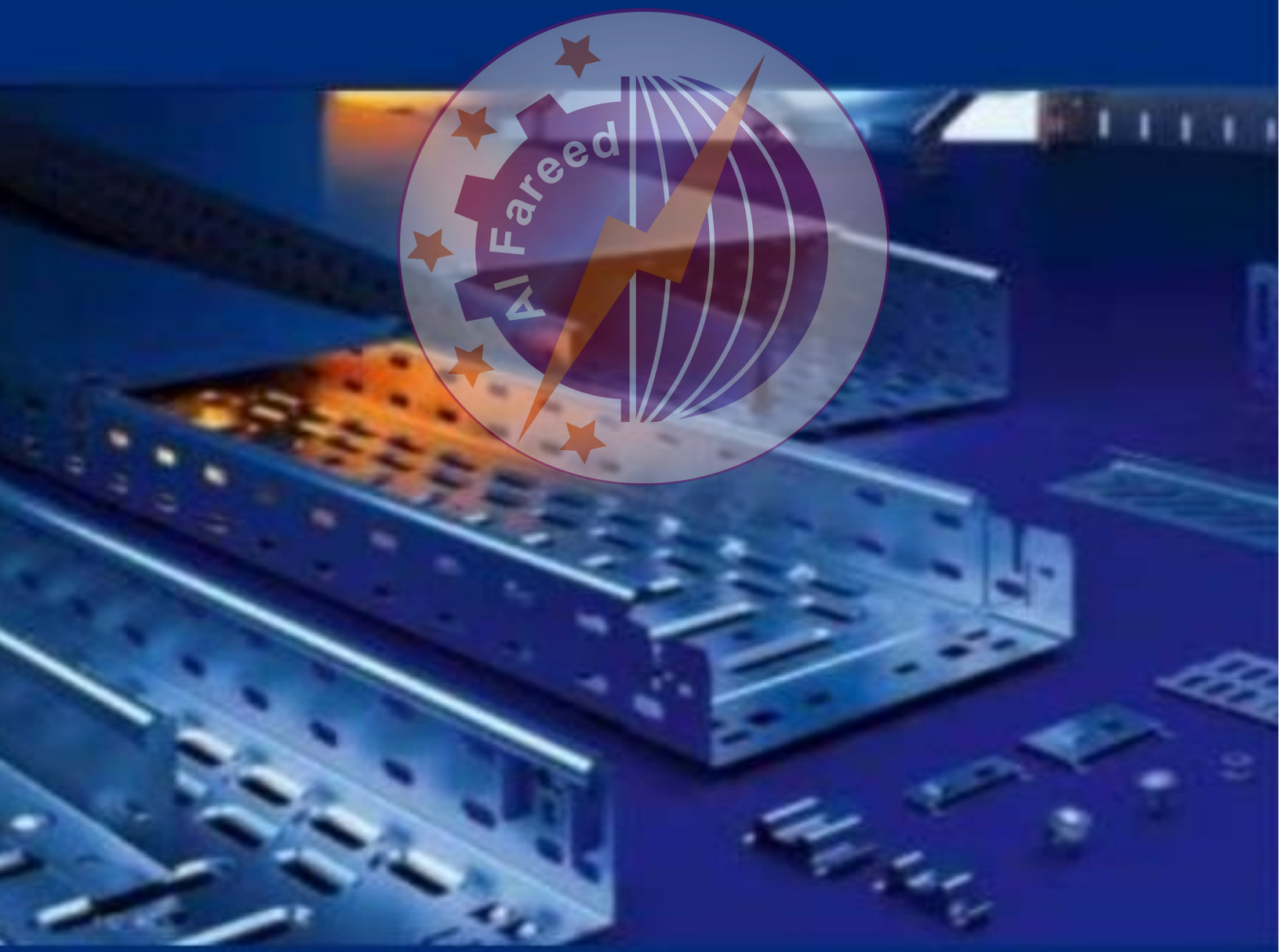

علامة الجودة
SASO
QUALITY MARK

SASO
المواصفات السعودية
Saudi Standards

BUREAU OF QUALITY CERTIFICATION
BQC

OUR STANDARD
YOUR GUARANTEE
ISO 9001 Quality
ISO 14001 Environment
OHSAS 18001 Health & Safety

CE

Cable Tray Section

Hot Dip Galvanized
Mill Galvanized
Aluminium
Stainless Steel
Powder Coated

AL FAREED STARS FACTORY CO.

CABLE TRAYS SELECTION

CABLE TRAYS - OUTSIDE RETURNED FLANGE

Part No : CT - OF(ST)/W

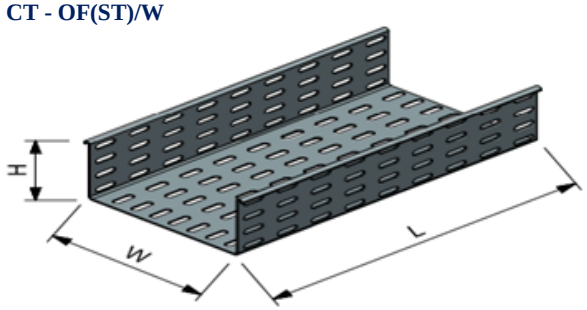

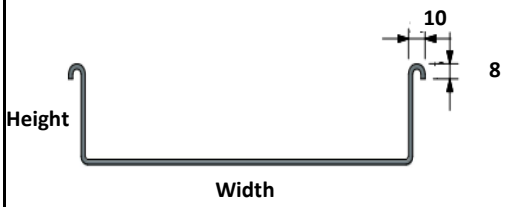

Item Code/ Part No.	Width(W) (mm)	Height (H) (mm)	Thickness (T) Light Duty (LD) (mm)	Thickness (T) Medium Duty(MD) (mm)	Thickness (T) Heavy Duty(HD) (mm)	Thickness (T) Extra heavy Duty(EHD) (mm)	Length(L) (Mtr)
CT-OF(ST) - 50	50	50	1.0	1.2	1.5	2.0	1.22 2.44 3.00
CT-OF(ST) - 100	100	50 / 75 / 100	1.0	1.2	1.5	2.0	
CT-OF(ST) - 150	150	50 / 75 / 100 / 150	1.0	1.2	1.5	2.0	
CT-OF(ST) - 200	200	50 / 75 / 100 / 150/200	1.0	1.2	1.5	2.0	
CT-OF(ST) - 250	250	50 / 75 / 100 / 150/200	1.0	1.2	1.5	2.0	
CT-OF(ST) - 300	300	50 / 75 / 100 / 150/200	1.0	1.2	1.5	2.0	
CT-OF(ST) - 350	350	50 / 75 / 100 / 150/200	1.2	1.5	2.0	2.0	
CT-OF(ST) - 400	400	50 / 75 / 100 / 150/200	1.2	1.5	2.0	2.0	**Material Finish(F)**
CT-OF(ST) - 450	450	50 / 75 / 100 / 150/200	1.2	1.5	2.0	2.0	
CT-OF(ST) - 500	500	50 / 75 / 100 / 150/200	1.2	1.5	2.0	2.0	HDG (Hot Dip Galvanized) MG (Mill Galvanized) ALU. (Aluminium) SS (Stainless Steel) PC (Powder Coating)
CT-OF(ST) - 550	550	50 / 75 / 100 / 150/200	1.2	1.5	2.0	2.0	
CT-OF(ST) - 600	600	50 / 75 / 100 / 150/200	1.2	1.5	2.0	2.0	
CT-OF(ST) - 650	650	50 / 75 / 100 / 150/200	1.5	1.5	2.0	2.0	
CT-OF(ST) - 700	700	50 / 75 / 100 / 150/200	1.5	1.5	2.0	2.0	
CT-OF(ST) - 750	750	50 / 75 / 100 / 150/200	1.5	1.5	2.0	2.0	
CT-OF(ST) - 800	800	50 / 75 / 100 / 150/200	1.5	1.5	2.0	2.0	
CT-OF(ST) - 850	850	50 / 75 / 100 / 150/200	1.5	1.5	2.0	2.0	
CT-OF(ST) - 900	900	50 / 75 / 100 / 150/200	1.5	1.5	2.0	2.0	
CT-OF(ST) - 1000	1000	50 / 75 / 100 / 150/200	1.5	2.0	2.0	2.0	
CT-OF(ST) - 1100	1100	50 / 75 / 100 / 150/200	1.5	2.0	2.0	2.0	
CT-OF(ST) - 1200	1200	50 / 75 / 100 / 150/200	1.5	2.0	2.0	2.0	

Ordering Guide :

CT-OF(ST)	(W)	(H)	(T)	(L)	(F)
Item Type	Wdth	Height	Thickness	Length	Finish

Example :

CT - OF (ST) - 300-50-1.5-2.44-HDG

Customer Service : Tel : 011 - 542 0047 / 011 - 410 6265, E - mail : info@alfareedstars.com, Web Site : www. alfareedstars.com

CABLE TRAYS - INSIDE RETURNED FLANGE

Part No : CT - IF(ST)/W

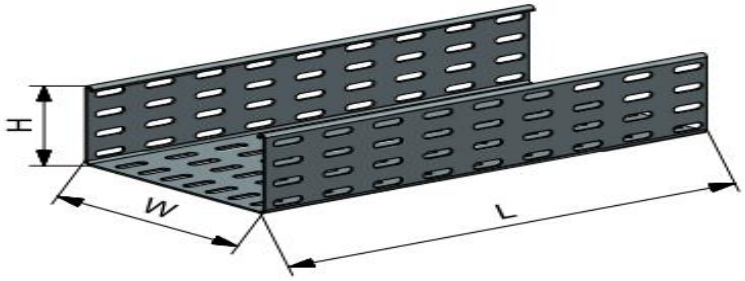

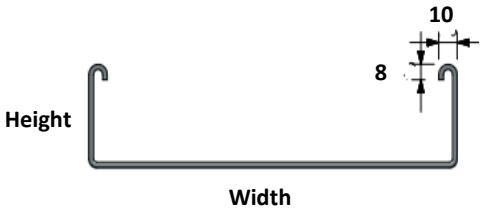

Item Code/ Part No.	Standard Width(W) (mm)	French Type Width(W) (mm)	Height (H) (mm)	Thickness (T) Light Duty (LD) (mm)	Thickness (T) Medium Duty(MD) (mm)	Thickness (T) Heavy Duty(HD) (mm)	Thickness (T) Extra heavy Duty(EHD) (mm)	Length(L) (Mtr)
CT-IF(ST) - 50	50		50	1.0	1.2	1.5	2.0	
CT-IF(ST) - 100	100	CTG 1 (120)		1.0	1.2	1.5	2.0	1.22
CT-IF(ST) - 150	150			1.0	1.2	1.5	2.0	
CT-IF(ST) - 200	200		60	1.0	1.2	1.5	2.0	2.44
CT-IF(ST) - 250	250	CTG 2 (218)		1.0	1.2	1.5	2.0	
CT-IF(ST) - 300	300			1.0	1.2	1.5	2.0	
CT-IF(ST) - 350	350		75	1.2	1.5	2.0	2.0	3.00
CT-IF(ST) - 400	400	CTG 3 (312)		1.2	1.5	2.0	2.0	**Material Finish(F)**
CT-IF(ST) - 450	450		90	1.2	1.5	2.0	2.0	
CT-IF(ST) - 500	500			1.2	1.5	2.0	2.0	HDG (Hot Dip Galvanized)
CT-IF(ST) - 550	550	CTG 4 (410)		1.2	1.5	2.0	2.0	
CT-IF(ST) - 600	600		100	1.2	1.5	2.0	2.0	
CT-IF(ST) - 650	650			1.5	1.5	2.0	2.0	MG (Mill Galvanized)
CT-IF(ST) - 700	700	CTG 5 (495)		1.5	1.5	2.0	2.0	
CT-IF(ST) - 750	750		110	1.5	1.5	2.0	2.0	ALU. (Aluminium)
CT-IF(ST) - 800	800			1.5	1.5	2.0	2.0	
CT-IF(ST) - 850	850	CTG 6 (600)		1.5	1.5	2.0	2.0	SS (Stainless Steel)
CT-IF(ST) - 900	900		125	1.5	1.5	2.0	2.0	
CT-IF(ST) - 1000	1000			1.5	2.0	2.0	2.0	PC (Powder Coating)
CT-IF(ST) - 1100	1100		150	1.5	2.0	2.0	2.0	
CT-IF(ST) - 1200	1200			1.5	2.0	2.0	2.0	

Ordering Guide :

CT-IF(ST) (W) (H) (T) (L) (F)

Item Type | Wdth | Height | Thickness | Length | Finish

Example :

CT- IF(ST) - 300-50-1.5-2.44-HDG

CABLE TRAYS - CUSTOMISED TYPES

Part No. : CT - CP - IF / W

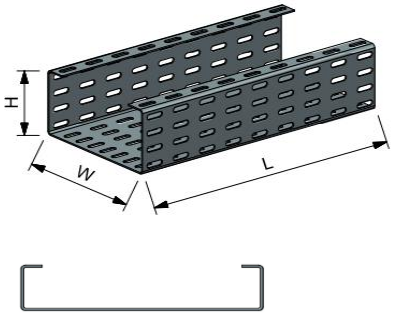

Part No.: CT - CP - OF / W

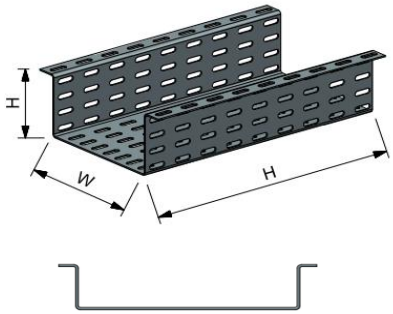

Part No. : CT - CP - U / W

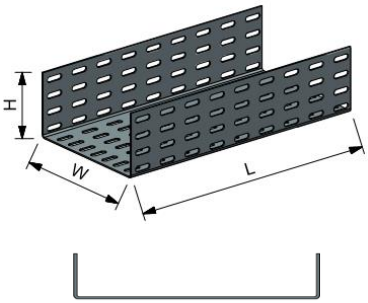

Part No. for Cable tray (CP-IF)	Part No. for Cable tray (CP-OF)	Part No. for Cable tray (CT - U)	Width(W) (mm)	Height (H) (mm)	Length(L) (Mtr)
CT-CP-IF(ST) - 50	CT-CP-OF(ST) - 50	CT- U(ST) - 50	50	50	
CT-CP-IF(ST) - 100	CT-CP-OF(ST) - 100	CT- U(ST) -100	100	60	1.22
CT-CP-IF(ST) - 150	CT-CP-OF(ST) - 150	CT- U(ST) -150	150	75	
CT-CP-IF(ST) - 200	CT-CP-OF(ST) - 200	CT- U(ST) -200	200	90	2.44
CT-CP-IF(ST) - 250	CT-CP-OF(ST) - 250	CT- U(ST) -250	250	100	
CT-CP-IF(ST) - 300	CT-CP-OF(ST) - 300	CT- U(ST) -300	300	110	
CT-CP-IF(ST) - 350	CT-CP-OF(ST) - 350	CT- U(ST) -350	350	125	3.00
CT-CP-IF(ST) - 400	CT-CP-OF(ST) - 400	CT- U(ST) -400	400	150	**Material Finish(F)**
CT-CP-IF(ST) - 450	CT-CP-OF(ST) - 450	CT- U(ST) -450	450	200	
CT-CP-IF(ST) - 500	CT-CP-OF(ST) - 500	CT- U(ST) -500	500		HDG (Hot Dip Galvanized)
CT-CP-IF(ST) - 550	CT-CP-OF(ST) - 550	CT- U(ST) -550	550	**Thickness (T) (mm)**	
CT-CP-IF(ST) - 600	CT-CP-OF(ST) - 600	CT- U(ST) -600	600		
CT-CP-IF(ST) - 650	CT-CP-OF(ST) - 650	CT- U(ST) -650	650	1.0	MG (Mill Galvanized)
CT-CP-IF(ST) - 700	CT-CP-OF(ST) - 700	CT- U(ST) -700	700		
CT-CP-IF(ST) - 750	CT-CP-OF(ST) - 750	CT- U(ST) -750	750	1.2	ALU. (Aluminium)
CT-CP-IF(ST) - 800	CT-CP-OF(ST) - 800	CT- U(ST) -800	800		
CT-CP-IF(ST) - 850	CT-CP-OF(ST) - 850	CT- U(ST) -850	850	1.5	SS (Stainless Steel)
CT-CP-IF(ST) - 900	CT-CP-OF(ST) - 900	CT- U(ST) -900	900		
CT-CP-IF(ST) - 1000	CT-CP-OF(ST) - 1000	CT- U(ST) -1000	1000	2.0	PC (Powder Coating)
CT-CP-IF(ST) - 1100	CT-CP-OF(ST) - 1100	CT- U(ST) -1100	1100		
CT-CP-IF(ST) - 1200	CT-CP-OF(ST) - 1200	CT- U(ST) -1200	1200		

Ordering Guide :

CT-OF(ST)	(W)	(H)	(T)	(L)	(F)
Item Type	Wdth	Height	Thickness	Length	Finish

Example :

CT - CP - IF (ST) - 300-50-1.5-2.44-HDG

AL FAREED STARS FACTORY CO.

CABLE TRAY WITH COVER SELECTION

CABLE TRAY WITH COVER

Part No - CT/COV - CT - OF/W

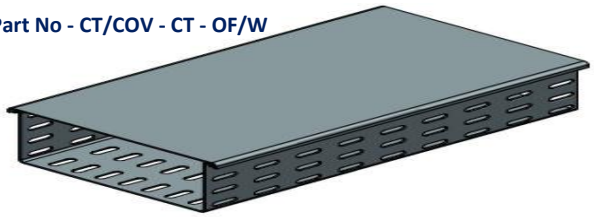

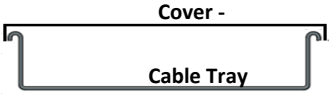

CABLE TRAY COVER ONLY

Part No - COV - CT - OF/W

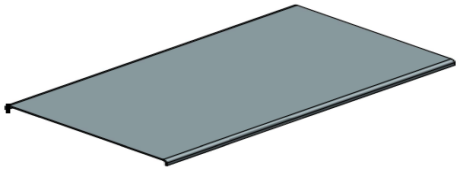

Item Code/ Part No. Cable tray With Cover	Item Code/ Part No. Cable tray Cover Only	Item Code/ Part No. Cable Tray Type	Cable tray/ Cover Width(W) (mm)	Cable Tray Height (H) (mm)	Thickness (T) Light Duty (LD) (mm)	Thickness (T) Medium Duty(MD) (mm)	Thickness (T) Heavy Duty(HD) (mm)	Thickness (T) Extra heavy Duty(EHD) (mm)	Length(L) (Mtr)
CT/COV (OF) - 50	COV - CT-OF - 50		50	50	1.0	1.2	1.5	2.0	
CT/COV (OF) - 100	COV - CT-OF - 100		100	50 / 75 / 100	1.0	1.2	1.5	2.0	1.22
CT/COV (OF) - 150	COV - CT-OF - 150		150	50 / 75 / 100 / 150	1.0	1.2	1.5	2.0	
CT/COV (OF) - 200	COV - CT-OF - 200		200	50 / 75 / 100 / 150/200	1.0	1.2	1.5	2.0	2.44
CT/COV (OF) - 250	COV - CT-OF - 250		250	50 / 75 / 100 / 150/200	1.0	1.2	1.5	2.0	
CT/COV (OF) - 300	COV - CT-OF - 300	Outside Flange	300	50 / 75 / 100 / 150/200	1.0	1.2	1.5	2.0	
CT/COV (OF) - 350	COV - CT-OF - 350		350	50 / 75 / 100 / 150/200	1.2	1.5	2.0	2.0	3.00
CT/COV (OF) - 400	COV - CT-OF - 400		400	50 / 75 / 100 / 150/200	1.2	1.5	2.0	2.0	Material Finish(F)
CT/COV (OF) - 450	COV - CT-OF - 450	Inside Flange	450	50 / 75 / 100 / 150/200	1.2	1.5	2.0	2.0	
CT/COV (OF) - 500	COV - CT-OF - 500		500	50 / 75 / 100 / 150/200	1.2	1.5	2.0	2.0	HDG (Hot Dip Galvanized)
CT/COV (OF) - 550	COV - CT-OF - 550	C - Profile Inside	550	50 / 75 / 100 / 150/200	1.2	1.5	2.0	2.0	
CT/COV (OF) - 600	COV - CT-OF - 600		600	50 / 75 / 100 / 150/200	1.2	1.5	2.0	2.0	
CT/COV (OF) - 650	COV - CT-OF - 650	C- ProfileOutside	650	50 / 75 / 100 / 150/200	1.5	1.5	2.0	2.0	MG (Mill Galvanized)
CT/COV (OF) - 700	COV - CT-OF - 700		700	50 / 75 / 100 / 150/200	1.5	1.5	2.0	2.0	
CT/COV (OF) - 750	COV - CT-OF - 750		750	50 / 75 / 100 / 150/200	1.5	1.5	2.0	2.0	ALU. (Aluminium)
CT/COV (OF) - 800	COV - CT-OF - 800	U - Type	800	50 / 75 / 100 / 150/200	1.5	1.5	2.0	2.0	
CT/COV (OF) - 850	COV - CT-OF - 850		850	50 / 75 / 100 / 150/200	1.5	1.5	2.0	2.0	SS (Stainless Steel)
CT/COV (OF) - 900	COV - CT-OF - 900		900	50 / 75 / 100 / 150/200	1.5	1.5	2.0	2.0	
CT/COV (OF) - 1000	COV - CT-OF - 1000		1000	50 / 75 / 100 / 150/200	1.5	2.0	2.0	2.0	PC (Powder Coating)
CT/COV (OF) - 1100	COV - CT-OF - 1100		1100	50 / 75 / 100 / 150/200	1.5	2.0	2.0	2.0	
CT/COV (OF) - 1200	COV - CT-OF - 1200		1200	50 / 75 / 100 / 150/200	1.5	2.0	2.0	2.0	

Ordering Guide : "Cable Tray With Cover "

CT/COV (OF) ⇔ Item Type | (W) ⇔ Wdth | (H) ⇔ Height | (T) ⇔ Thickness | (L) ⇔ Length | (F) ⇔ Finish

Example :
CT/COV- OF(ST) - 200-100-1.5-2.44-HDG

Ordering Guide : "Cable Tray Cover Only "

CT/COV (OF) ⇔ Item Type | (W) ⇔ Wdth | (T) ⇔ Thickness | (L) ⇔ Length | (F) ⇔ Finish

Example :
CT/COV- OF(ST) - 200-1.5-2.44-HDG

90^0 HORIZONTAL ELBOW / BEND FOR CABLE TRAY

Item Type - 1 (Part No. : CT - 90 HB1/W)

Item Type - 2 (Part No. : CT - 90 HB2/W)

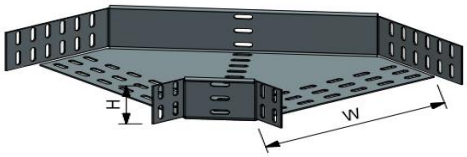

Item Type - 1 With Cover (Part No. : CT - 90 HB1/C/W)

Item Type - 2 With Cover (Part No. : CT -90 HB2/C/W)

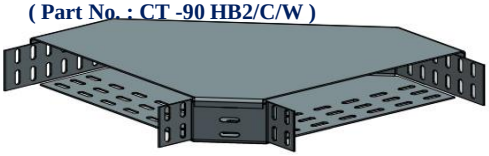

Item Code/ Part No. for Type - 1	Item Code/ Part No. for Type - 2	Width(W) (mm)	Height (H) (mm)	Thickness (T) (mm)				Radius (mm)
CT- (90 HB1) - 50	CT- (90 HB2) - 50	50	50	1.0	1.2	1.5	2.0	100
CT- (90 HB1) - 100	CT- (90 HB2) - 100	100	50 / 75 / 100	1.0	1.2	1.5	2.0	150
CT- (90 HB1) - 150	CT- (90 HB2) - 150	150	50 / 75 / 100/150	1.0	1.2	1.5	2.0	200
CT- (90 HB1) - 200	CT- (90 HB2) - 200	200	50 / 75 / 100 / 150 / 200	1.0	1.2	1.5	2.0	300
CT- (90 HB1) - 250	CT- (90 HB2) - 250	250	50 / 75 / 100 / 150 / 200	1.0	1.2	1.5	2.0	450
CT- (90 HB1) - 300	CT- (90 HB2) - 300	300	50 / 75 / 100 / 150 / 200	1.0	1.2	1.5	2.0	600
CT- (90 HB1) - 350	CT- (90 HB2) - 350	350	50 / 75 / 100 / 150 / 200	1.2	1.5	2.0	2.0	900
CT- (90 HB1) - 400	CT- (90 HB2) - 400	400	50 / 75 / 100 / 150 / 200	1.2	1.5	2.0	2.0	**Material Finish(F)**
CT- (90 HB1) - 450	CT- (90 HB2) - 450	450	50 / 75 / 100 / 150 / 200	1.2	1.5	2.0	2.0	
CT- (90 HB1) - 500	CT- (90 HB2) - 500	500	50 / 75 / 100 / 150 / 200	1.2	1.5	2.0	2.0	HDG (Hot Dip Galvanized) MG (Mill Galvanized) ALU. (Aluminium) SS (Stainless Steel) PC (Powder Coated)
CT- (90 HB1) - 600	CT- (90 HB2) - 600	600	50 / 75 / 100 / 150 / 200	1.2	1.5	2.0	2.0	
CT- (90 HB1) - 700	CT- (90 HB2) - 700	700	50 / 75 / 100 / 150 / 200	1.5	1.5	2.0	2.0	
CT- (90 HB1) - 750	CT- (90 HB2) - 750	750	50 / 75 / 100 / 150 / 200	1.5	1.5	2.0	2.0	
CT- (90 HB1) - 800	CT- (90 HB2) - 800	800	50 / 75 / 100 / 150 / 200	1.5	1.5	2.0	2.0	
CT- (90 HB1) - 900	CT- (90 HB2) - 900	900	50 / 75 / 100 / 150 / 200	1.5	1.5	2.0	2.0	
CT- (90 HB1) - 1000	CT- (90 HB2) - 1000	1000	50 / 75 / 100 / 150 / 200	1.5	2.0	2.0	2.0	

Notes:

** Use Item Code "CT - (90 HB1) / C " for 90° Elbow with Cover (For Type - 1)*

** Use Item Code "CT - (90 HB2) / C " for 90° Elbow with Cover (For Type - 2)*

45^{0} HORIZONTAL ELBOW / BEND FOR CABLE TRAY

Item Type - 1 (Part No. : CT - 45 HB1/W

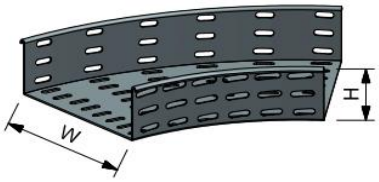

Item Type - With Cover (Part No. : CT - 45 HB1/C/W)

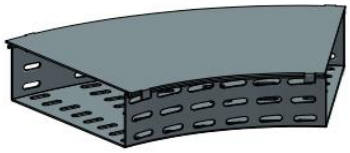

Item Type - 2 (Part No. CT - 45 HB2/ W)

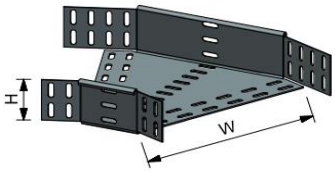

Item Type - 2 With Cover
(Part No. : CT - 45 H2/C/W)

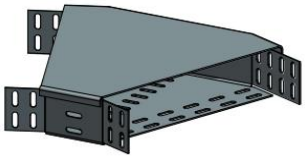

Item Code/ Part No. for Type - 1	Item Code/ Part No. for Type - 2	Width(W) (mm)	Height (H) (mm)	Thickness (T) (mm)				Radius (mm)
CT- (45 HB1) - 50	CT- (45 HB2) - 50	50	50	1.0	1.2	1.5	2.0	100
CT- (45 HB1) - 100	CT- (45 HB2) - 100	100	50 / 75 / 100	1.0	1.2	1.5	2.0	150
CT- (45 HB1) - 150	CT- (45 HB2) - 150	150	50 / 75 / 100/150	1.0	1.2	1.5	2.0	200
CT- (45 HB1) - 200	CT- (45 HB2) - 200	200	50 / 75 / 100 / 150 / 200	1.0	1.2	1.5	2.0	300
CT- (45 HB1) - 250	CT- (45 HB2) - 250	250	50 / 75 / 100 / 150 / 200	1.0	1.2	1.5	2.0	450
CT- (45 HB1) - 300	CT- (45 HB2) - 300	300	50 / 75 / 100 / 150 / 200	1.0	1.2	1.5	2.0	600
CT- (45 HB1) - 350	CT- (45 HB2) - 350	350	50 / 75 / 100 / 150 / 200	1.2	1.5	2.0	2.0	900
CT- (45 HB1) - 400	CT- (45 HB2) - 400	400	50 / 75 / 100 / 150 / 200	1.2	1.5	2.0	2.0	**Material Finish(F)**
CT- (45 HB1) - 450	CT- (45 HB2) - 450	450	50 / 75 / 100 / 150 / 200	1.2	1.5	2.0	2.0	
CT- (45 HB1) - 500	CT- (45 HB2) - 500	500	50 / 75 / 100 / 150 / 200	1.2	1.5	2.0	2.0	HDG (Hot Dip Galvanized) MG (Mill Galvanized) ALU. (Aluminium) SS (Stainless Steel) PC (Powder Coated)
CT- (45 HB1) - 600	CT- (45 HB2) - 600	600	50 / 75 / 100 / 150 / 200	1.2	1.5	2.0	2.0	
CT- (45 HB1) - 700	CT- (45 HB2) - 700	700	50 / 75 / 100 / 150 / 200	1.5	1.5	2.0	2.0	
CT- (45 HB1) - 750	CT- (45 HB2) - 750	750	50 / 75 / 100 / 150 / 200	1.5	1.5	2.0	2.0	
CT- (45 HB1) - 800	CT- (45 HB2) - 800	800	50 / 75 / 100 / 150 / 200	1.5	1.5	2.0	2.0	
CT- (45 HB1) - 900	CT- (45 HB2) - 900	900	50 / 75 / 100 / 150 / 200	1.5	1.5	2.0	2.0	
CT- (45 HB1) - 1000	CT- (45 HB2) - 1000	1000	50 / 75 / 100 / 150 / 200	1.5	2.0	2.0	2.0	

Notes:

** Use Item Code "CT - (45 HB1) / C " for 45° Elbow with Cover (For Type - 1)*

** Use Item Code "CT - (45 HB2) / C " for 45° Elbow with Cover (For Type - 2)*

90^0 VERTICAL OUTSIDE RISER/ ELBOW / BEND FOR CABLE TRAY

Item Type - 1
(Part No : CT - 90 OR1/W)

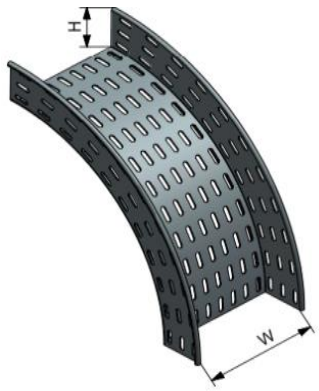

Item Type - 1 With Cover
(Part No. : CT - 90 OR1/C/W)

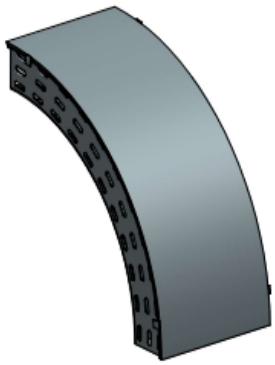

Item Type - 2
Part No :CT - 90 OR2/W)

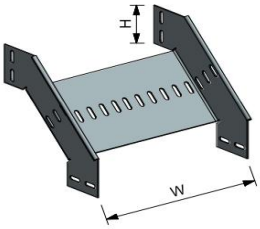

Item Type - 2 With Cover
(Part No : CT - 90 OR2/C/W)

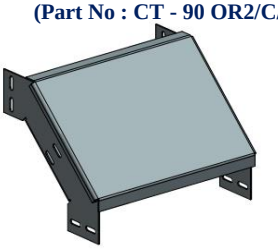

Item Code/ Part No. for Type - 1	Item Code/ Part No. for Type - 2	Width(W) (mm)	Height (H) (mm)	Thickness (T) (mm)				Radius (mm)
CT- (90 OR1) - 50	CT- (90 OR2) - 50	50	50	1.0	1.2	1.5	2.0	100
CT- (90 OR1) - 100	CT- (90 OR2) - 100	100	50 / 75 / 100	1.0	1.2	1.5	2.0	150
CT- (90 OR1) - 150	CT- (90 OR2) - 150	150	50 / 75 / 100/150	1.0	1.2	1.5	2.0	200
CT- (90 OR1) - 200	CT- (90 OR2) - 200	200	50 / 75 / 100 / 150 / 200	1.0	1.2	1.5	2.0	300
CT- (90 OR1) - 250	CT- (90 OR2) - 250	250	50 / 75 / 100 / 150 / 200	1.0	1.2	1.5	2.0	450
CT- (90 OR1) - 300	CT- (90 OR2) - 300	300	50 / 75 / 100 / 150 / 200	1.0	1.2	1.5	2.0	600
CT- (90 OR1) - 350	CT- (90 OR2) - 350	350	50 / 75 / 100 / 150 / 200	1.2	1.5	2.0	2.0	900
CT- (90 OR1) - 400	CT- (90 OR2) - 400	400	50 / 75 / 100 / 150 / 200	1.2	1.5	2.0	2.0	**Material Finish(F)**
CT- (90 OR1) - 450	CT- (90 OR2) - 450	450	50 / 75 / 100 / 150 / 200	1.2	1.5	2.0	2.0	
CT- (90 OR1) - 500	CT- (90 OR2) - 500	500	50 / 75 / 100 / 150 / 200	1.2	1.5	2.0	2.0	HDG (Hot Dip Galvanized)
CT- (90 OR1) - 600	CT- (90 OR2) - 600	600	50 / 75 / 100 / 150 / 200	1.2	1.5	2.0	2.0	MG (Mill Galvanized)
CT- (90 OR1) - 700	CT- (90 OR2) - 700	700	50 / 75 / 100 / 150 / 200	1.5	1.5	2.0	2.0	ALU. (Aluminium)
CT- (90 OR1) - 750	CT- (90 OR2) - 750	750	50 / 75 / 100 / 150 / 200	1.5	1.5	2.0	2.0	SS (Stainless Steel)
CT- (90 OR1) - 800	CT- (90 OR2) - 800	800	50 / 75 / 100 / 150 / 200	1.5	1.5	2.0	2.0	PC (Powder Coated)
CT- (90 OR1) - 900	CT- (90 OR2) - 900	900	50 / 75 / 100 / 150 / 200	1.5	1.5	2.0	2.0	
CT- (90 OR1) - 1000	CT- (90 OR2) - 1000	1000	50 / 75 / 100 / 150 / 200	1.5	2.0	2.0	2.0	

Notes:

** Use Item Code "CT - (90 OR1) / C " for 90° Outside Riser* ***with Cover (For Type 1)***

** Use Item Code "CT - (90 OR2) / C " for 90° Outside Riser* ***with Cover (For Type 2)***

90^0 Vertical Inside Riser/ Elbow / Bend for Cable Tray

Item Type - 1
(Part No : CT - 90 IR1/W)

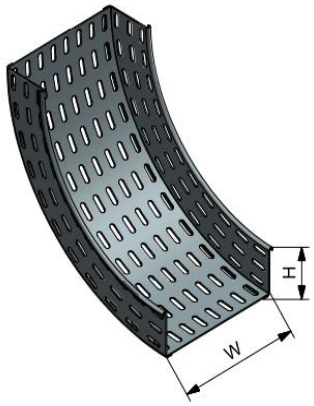

Item Type - 1 With Cover
(Part No. : CT - 90 IR1/C/W)

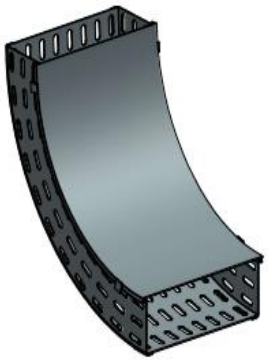

Item Type - 2
Part No :CT - 90 IR2/W)

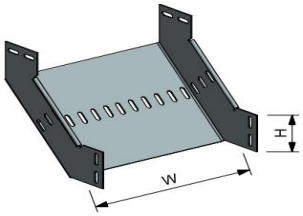

Item Type - 2 With Cover
(Part No : CT - 90 IR2/C/W)

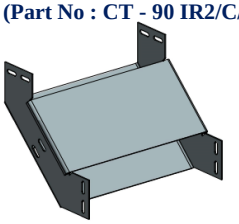

Item Code/ Part No. for Type 90 IR1	Item Code/ Part No. for Type 90 IR2	Width(W) (mm)	Height (H) (mm)	Thickness (T) (mm)				Radius (mm)
CT- (90 IR1) - 50	CT- (90 IR2) - 50	50	50	1.0	1.2	1.5	2.0	100
CT- (90 IR1) - 100	CT- (90 IR2) - 100	100	50 / 75 / 100	1.0	1.2	1.5	2.0	150
CT- (90 IR1) - 150	CT- (90 IR2) - 150	150	50 / 75 / 100/150	1.0	1.2	1.5	2.0	200
CT- (90 IR1) - 200	CT- (90 IR2) - 200	200	50 / 75 / 100 / 150 / 200	1.0	1.2	1.5	2.0	300
CT- (90 IR1) - 250	CT- (90 IR2) - 250	250	50 / 75 / 100 / 150 / 200	1.0	1.2	1.5	2.0	450
CT- (90 IR1) - 300	CT- (90 IR2) - 300	300	50 / 75 / 100 / 150 / 200	1.0	1.2	1.5	2.0	600
CT- (90 IR1) - 350	CT- (90 IR2) - 350	350	50 / 75 / 100 / 150 / 200	1.2	1.5	2.0	2.0	900
CT- (90 IR1) - 400	CT- (90 IR2) - 400	400	50 / 75 / 100 / 150 / 200	1.2	1.5	2.0	2.0	**Material Finish(F)**
CT- (90 IR1) - 450	CT- (90 IR2) - 450	450	50 / 75 / 100 / 150 / 200	1.2	1.5	2.0	2.0	
CT- (90 IR1) - 500	CT- (90 IR2) - 500	500	50 / 75 / 100 / 150 / 200	1.2	1.5	2.0	2.0	HDG (Hot Dip Galvanized)
CT- (90 IR1) - 600	CT- (90 IR2) - 600	600	50 / 75 / 100 / 150 / 200	1.2	1.5	2.0	2.0	MG (Mill Galvanized)
CT- (90 IR1) - 700	CT- (90 IR2) - 700	700	50 / 75 / 100 / 150 / 200	1.5	1.5	2.0	2.0	ALU. (Aluminium)
CT- (90 IR1) - 750	CT- (90 IR2) - 750	750	50 / 75 / 100 / 150 / 200	1.5	1.5	2.0	2.0	SS (Stainless Steel)
CT- (90 IR1) - 800	CT- (90 IR2) - 800	800	50 / 75 / 100 / 150 / 200	1.5	1.5	2.0	2.0	PC (Powder Coated)
CT- (90 IR1) - 900	CT- (90 IR2) - 900	900	50 / 75 / 100 / 150 / 200	1.5	1.5	2.0	2.0	
CT- (90 IR1) - 1000	CT- (90 IR2) - 1000	1000	50 / 75 / 100 / 150 / 200	1.5	2.0	2.0	2.0	

Notes:

** Use Item Code "CT - (90 IR1) / C " for 90° Inside Riser with Cover (For Type - 1)*

** Use Item Code "CT - (90 IR2) / C " for 90° Inside Riser with Cover (For Type - 2)*

45^0 Vertical Outside Riser/ Elbow / Bend for Cable Tray

Item Type - 1
(Part No : CT - 45 OR1/W)

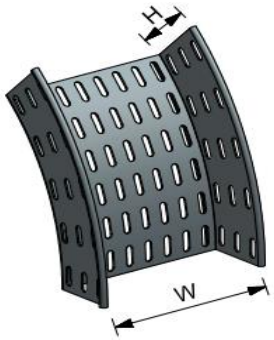

Item Type - 1 With Cover
(Part No. : CT - 45 OR1/C/W)

Item Type - 2
Part No :CT - 45 OR2/W)

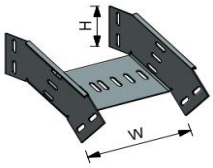

Item Type - 2 With Cover
(Part No : CT - 45 OR2/C/W)

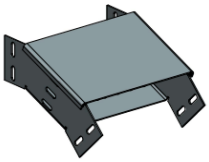

Item Code/ Part No. for Type 45 OR1	Item Code/ Part No. for Type 45 OR2	Width(W) (mm)	Height (H) (mm)	Thickness (T) (mm)				Radius (mm)
CT- (45 OR1) - 50	CT- (45 OR2) - 50	50	50	1.0	1.2	1.5	2.0	100
CT- (45 OR1) - 100	CT- (45 OR2) - 100	100	50 / 75 / 100	1.0	1.2	1.5	2.0	150
CT- (45 OR1) - 150	CT- (45 OR2) - 150	150	50 / 75 / 100/150	1.0	1.2	1.5	2.0	200
CT- (45 OR1) - 200	CT- (45 OR2) - 200	200	50 / 75 / 100 / 150 / 200	1.0	1.2	1.5	2.0	300
CT- (45 OR1) - 250	CT- (45 OR2) - 250	250	50 / 75 / 100 / 150 / 200	1.0	1.2	1.5	2.0	450
CT- (45 OR1) - 300	CT- (45 OR2) - 300	300	50 / 75 / 100 / 150 / 200	1.0	1.2	1.5	2.0	600
CT- (45 OR1) - 350	CT- (45 OR2) - 350	350	50 / 75 / 100 / 150 / 200	1.2	1.5	2.0	2.0	900
CT- (45 OR1) - 400	CT- (45 OR2) - 400	400	50 / 75 / 100 / 150 / 200	1.2	1.5	2.0	2.0	Material Finish(F)
CT- (45 OR1) - 450	CT- (45 OR2) - 450	450	50 / 75 / 100 / 150 / 200	1.2	1.5	2.0	2.0	
CT- (45 OR1) - 500	CT- (45 OR2) - 500	500	50 / 75 / 100 / 150 / 200	1.2	1.5	2.0	2.0	HDG (Hot Dip Galvanized) MG (Mill Galvanized) ALU. (Aluminium) SS (Stainless Steel) PC (Powder Coated)
CT- (45 OR1) - 600	CT- (45 OR2) - 600	600	50 / 75 / 100 / 150 / 200	1.2	1.5	2.0	2.0	
CT- (45 OR1) - 700	CT- (45 OR2) - 700	700	50 / 75 / 100 / 150 / 200	1.5	1.5	2.0	2.0	
CT- (45 OR1) - 750	CT- (45 OR2) - 750	750	50 / 75 / 100 / 150 / 200	1.5	1.5	2.0	2.0	
CT- (45 OR1) - 800	CT- (45 OR2) - 800	800	50 / 75 / 100 / 150 / 200	1.5	1.5	2.0	2.0	
CT- (45 OR1) - 900	CT- (45 OR2) - 900	900	50 / 75 / 100 / 150 / 200	1.5	1.5	2.0	2.0	
CT- (45 OR1) - 1000	CT- (45 OR2) - 1000	1000	50 / 75 / 100 / 150 / 200	1.5	2.0	2.0	2.0	

Notes:

** Use Item Code "CT - (45 OR1) / C " for 45° Outside Riser* ***with Cover*** **(For Type - 1)**

** Use Item Code "CT - (45 OR2) / C " for 45° Outside Riser* ***with Cover*** **(For Type - 2)**

45^0 Vertical Inside Riser/ Elbow / Bend for Cable Tray

Item Type - 1
(Part No : CT - 45 IR1/W)

Item Type - 1 With Cover
(Part No. : CT - 45 IR1/C/W)

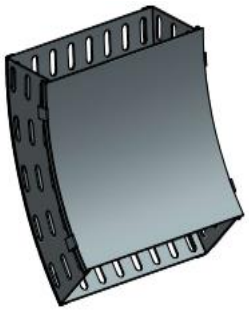

Item Type - 2
Part No :CT - 45 IR2/W)

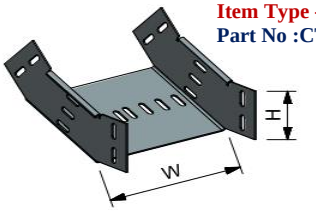

Item Type - 2 With Cover
(Part No : CT - 45 IR/C/W)

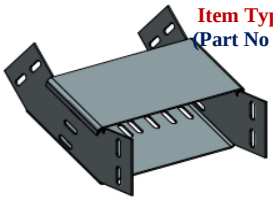

Item Code/ Part No. for Type 45 IR1	Item Code/ Part No. for Type 45 IR2	Width(W) (mm)	Height (H) (mm)	Thickness (T) (mm)				Radius (mm)
CT- (45 IR1)- 50	CT- (45 IR2) - 50	50	50	1.0	1.2	1.5	2.0	100
CT- (45 IR1) - 100	CT- (45 IR2) - 100	100	50 / 75 / 100	1.0	1.2	1.5	2.0	150
CT- (45 IR1) - 150	CT- (45 IR2) - 150	150	50 / 75 / 100/150	1.0	1.2	1.5	2.0	200
CT- (45 IR1) - 200	CT- (45 IR2) - 200	200	50 / 75 / 100 / 150 / 200	1.0	1.2	1.5	2.0	300
CT- (45 IR1) - 250	CT- (45 IR2) - 250	250	50 / 75 / 100 / 150 / 200	1.0	1.2	1.5	2.0	450
CT- (45 IR1) - 300	CT- (45 IR2) - 300	300	50 / 75 / 100 / 150 / 200	1.0	1.2	1.5	2.0	600
CT- (45 IR1) - 350	CT- (45 IR2) - 350	350	50 / 75 / 100 / 150 / 200	1.2	1.5	2.0	2.0	900
CT- (45 IR1) - 400	CT- (45 IR2) - 400	400	50 / 75 / 100 / 150 / 200	1.2	1.5	2.0	2.0	**Material Finish(F)**
CT- (45 IR1) - 450	CT- (45 IR2) - 450	450	50 / 75 / 100 / 150 / 200	1.2	1.5	2.0	2.0	
CT- (45 IR1) - 500	CT- (45 IR2) - 500	500	50 / 75 / 100 / 150 / 200	1.2	1.5	2.0	2.0	HDG (Hot Dip Galvanized) MG (Mill Galvanized) ALU. (Aluminium) SS (Stainless Steel) PC (Powder Coated)
CT- (45 IR1) - 600	CT- (45 IR2) - 600	600	50 / 75 / 100 / 150 / 200	1.2	1.5	2.0	2.0	
CT- (45 IR1) - 700	CT- (45 IR2) - 700	700	50 / 75 / 100 / 150 / 200	1.5	1.5	2.0	2.0	
CT- (45 IR1) - 750	CT- (45 IR2) - 750	750	50 / 75 / 100 / 150 / 200	1.5	1.5	2.0	2.0	
CT- (45 IR1) - 800	CT- (45 IR2) - 800	800	50 / 75 / 100 / 150 / 200	1.5	1.5	2.0	2.0	
CT- (45 IR1) - 900	CT- (45 IR2) - 900	900	50 / 75 / 100 / 150 / 200	1.5	1.5	2.0	2.0	
CT- (45 IR1) - 1000	CT- (45 IR2) - 1000	1000	50 / 75 / 100 / 150 / 200	1.5	2.0	2.0	2.0	

Notes:

** Use Item Code "CT - (45 IR1) / C " for 45° Outside Riser* ***with Cover*** **(For Type - 1)**

** Use Item Code "CT - (45 IR2) / C " for 45° Outside Riser* ***with Cover*** **(For Type - 2)**

Horizontal Tee for Cable Tray

Item Type - 1
(Part No.CT - HT-1/W)

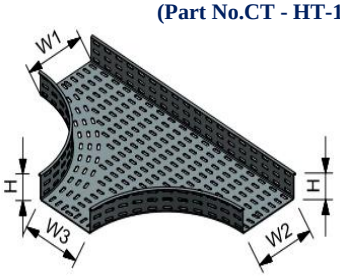

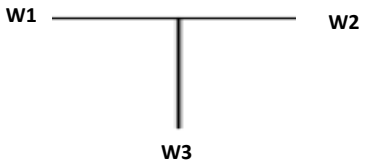

Item Type - 2
(Part No. CT - HT - 2/W)

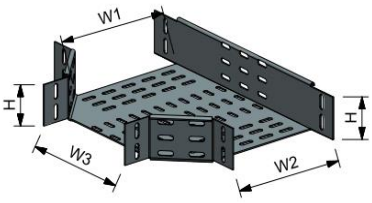

Item Type -1 With Coverr
(Part No. CT - HT - 1/C/W)

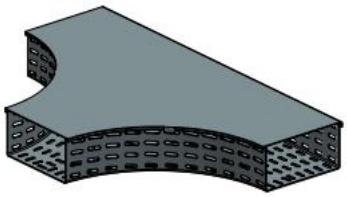

Vertical Tee
Part No : CT - VT - 3/W)

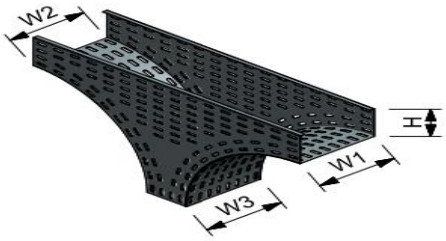

Item Type - 2 With Cover
Part No. : CT - HT - 2/C/W)

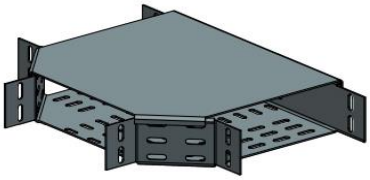

Item Code/ Part No. for Type HT1	Item Code/ Part No. for Type HT2	Width(W) (mm)	Height (H) (mm)	Thickness (T) (mm)				Radius (mm)
CT- (HT1)- 50	CT- (HT2) - 50	50	50	1.0	1.2	1.5	2.0	100
CT- (HT1) - 100	CT- (HT2) - 100	100	50 / 75 / 100	1.0	1.2	1.5	2.0	150
CT- (HT1) - 150	CT- (HT2) - 150	150	50 / 75 / 100/150	1.0	1.2	1.5	2.0	200
CT- (HT1) - 200	CT- (HT2) - 200	200	50 / 75 / 100 / 150 / 200	1.0	1.2	1.5	2.0	300
CT- (HT1) - 250	CT- (HT2) - 250	250	50 / 75 / 100 / 150 / 200	1.0	1.2	1.5	2.0	450
CT- (HT1) - 300	CT- (HT2) - 300	300	50 / 75 / 100 / 150 / 200	1.0	1.2	1.5	2.0	600
CT- (HT1) - 350	CT- (HT2) - 350	350	50 / 75 / 100 / 150 / 200	1.2	1.5	2.0	2.0	900
CT- (HT1) - 400	CT- (HT2) - 400	400	50 / 75 / 100 / 150 / 200	1.2	1.5	2.0	2.0	**Material Finish(F)**
CT- (HT1) - 450	CT- (HT2) - 450	450	50 / 75 / 100 / 150 / 200	1.2	1.5	2.0	2.0	
CT- (HT1) - 500	CT- (HT2) - 500	500	50 / 75 / 100 / 150 / 200	1.2	1.5	2.0	2.0	HDG (Hot Dip Galvanized)
CT- (HT1) - 600	CT- (HT2) - 600	600	50 / 75 / 100 / 150 / 200	1.2	1.5	2.0	2.0	MG (Mill Galvanized)
CT- (HT1) - 700	CT- (HT2) - 700	700	50 / 75 / 100 / 150 / 200	1.5	1.5	2.0	2.0	ALU. (Aluminium)
CT- (HT1) - 750	CT- (HT2) - 750	750	50 / 75 / 100 / 150 / 200	1.5	1.5	2.0	2.0	SS (Stainless Steel)
CT- (HT1) - 800	CT- (HT2) - 800	800	50 / 75 / 100 / 150 / 200	1.5	1.5	2.0	2.0	PC (Powder Coated)
CT- (HT1) - 900	CT- (HT2) - 900	900	50 / 75 / 100 / 150 / 200	1.5	1.5	2.0	2.0	
CT- (HT1) - 1000	CT- (HT2) - 1000	1000	50 / 75 / 100 / 150 / 200	1.5	2.0	2.0	2.0	

Notes:

** Use Item Code "CT - (HT1) / C " for Horizontal Tee* ***with Cover*** (For Type - 1)

** Use Item Code "CT - (HT2) / C " for Horizontal Tee* ***with Cover*** (For Type - 2)

Horizontal Cross / Intersection for Cable Tray

Item Type - 1 Part No :CT - HC-1/W)

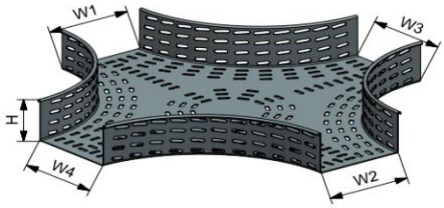

Item Type -1 With Cover
(Part No : CT - HC - 1/C)/W)

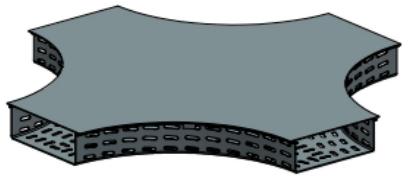

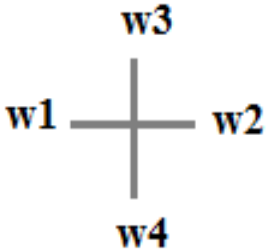

Item Type -2
(Part No : CT - HC - 2/W)

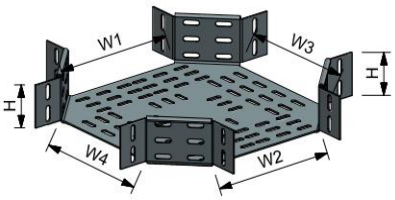

Item Type - 2 With Cover
(Part No : CT - HC - 2/C/W)

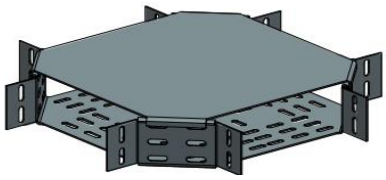

Item Code/ Part No. for Type HC1	Item Code/ Part No. for Type HC2	Width(W) (mm)	Height (H) (mm)	Thickness (T) (mm)				Radius (mm)
CT- (HC1)- 50	CT- (HC2) - 50	50	50	1.0	1.2	1.5	2.0	100
CT- (HC1) - 100	CT- (HC2) - 100	100	50 / 75 / 100	1.0	1.2	1.5	2.0	150
CT- (HC1) - 150	CT- (HC2) - 150	150	50 / 75 / 100/150	1.0	1.2	1.5	2.0	200
CT- (HC1) - 200	CT- (HC2) - 200	200	50 / 75 / 100 / 150 / 200	1.0	1.2	1.5	2.0	300
CT- (HC1) - 250	CT- (HC2) - 250	250	50 / 75 / 100 / 150 / 200	1.0	1.2	1.5	2.0	450
CT- (HC1) - 300	CT- (HC2) - 300	300	50 / 75 / 100 / 150 / 200	1.0	1.2	1.5	2.0	600
CT- (HC1) - 350	CT- (HC2) - 350	350	50 / 75 / 100 / 150 / 200	1.2	1.5	2.0	2.0	900
CT- (HC1) - 400	CT- (HC2) - 400	400	50 / 75 / 100 / 150 / 200	1.2	1.5	2.0	2.0	**Material Finish(F)**
CT- (HC1) - 450	CT- (HC2) - 450	450	50 / 75 / 100 / 150 / 200	1.2	1.5	2.0	2.0	
CT- (HC1) - 500	CT- (HC2) - 500	500	50 / 75 / 100 / 150 / 200	1.2	1.5	2.0	2.0	HDG (Hot Dip Galvanized) MG (Mill Galvanized) ALU. (Aluminium) SS (Stainless Steel) PC (Powder Coated)
CT- (HC1) - 600	CT- (HC2) - 600	600	50 / 75 / 100 / 150 / 200	1.2	1.5	2.0	2.0	
CT- (HC1) - 700	CT- (HC2) - 700	700	50 / 75 / 100 / 150 / 200	1.5	1.5	2.0	2.0	
CT- (HC1) - 750	CT- (HC2) - 750	750	50 / 75 / 100 / 150 / 200	1.5	1.5	2.0	2.0	
CT- (HC1) - 800	CT- (HC2) - 800	800	50 / 75 / 100 / 150 / 200	1.5	1.5	2.0	2.0	
CT- (HC1) - 900	CT- (HC2) - 900	900	50 / 75 / 100 / 150 / 200	1.5	1.5	2.0	2.0	
CT- (HC1) - 1000	CT- (HC2) - 1000	1000	50 / 75 / 100 / 150 / 200	1.5	2.0	2.0	2.0	

Notes:

** Use Item Code "CT - (HC1) / C " for Horizontal Tee* ***with Cover*** **(For Type - 1)**

** Use Item Code "CT - (HC2) / C " for Horizontal Tee* ***with Cover*** **(For Type - 2)**

Reducers for Cable Trays

Straight Reducer (Type 1)
Part No: CT - STR 1- W1/W2

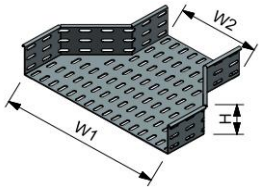

Straight Reducer (Type 2 :
Part No : CT - STR 2 - W1/W2

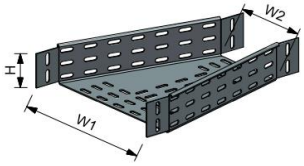

Left Hand Reducer
Part No : T - LHR- W1/W2

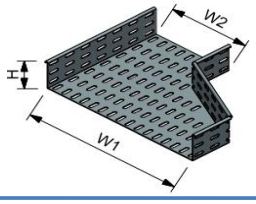

Right Hand Reducer
Part No : CT - RHR- W1/W2

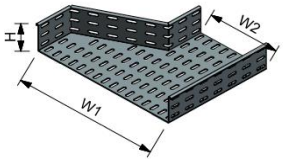

Straight Reducer W/Cover (Type 1)
Part No : CT - STR 1 - C - W1/W2

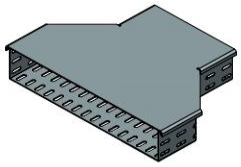

Straight Reducer W/Cover (Type 2)
Part No : CT - STR 2 - C - W1/W2

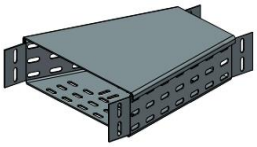

Left Hand Reducer W.Cover
Part No : CT - LHR - C - W1/W2

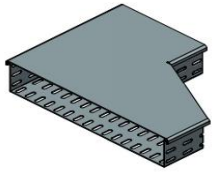

Right Hand Reducer W/Cover
Part No : CT - RHR - C - W1/W2

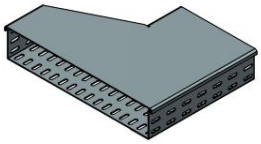

Item Code/ Part No. for Straight Reducer	Item Code/ Part No. for Left Hand Reducer	Item Code/ Part No. for Right Hand Reducer	Width (W_1-W_2) (mm)	Height (H) (mm)	Thickness (T) (mm)	Material Finish(F)
CT- (STR) 100/W2	CT- (LHR) 100/W2	CT- (RHR)100/W2	100 - W2	50 / 75 / 100 / 150 / 200	1.0 / 1.2 / 1.5 / 2.0	HDG (Hot Dip Galv.)
CT- (STR) 150/W2	CT- (LHR) 150/W2	CT- (RHR)150/W2	150 - W2	50 / 75 / 100 / 150 / 200	1.0 / 1.2 / 1.5 / 2.0	
CT- (STR) 200/W2	CT- (LHR) 200/W2	CT- (RHR) 200/W2	200 - W2	50 / 75 / 100 / 150 / 200	1.0 / 1.2 / 1.5 / 2.0	MG (Mill Galv.)
CT- (STR) 250/W2	CT- (LHR) 250/W2	CT- (RHR)250/W2	250 - W2	50 / 75 / 100 / 150 / 200	1.0 / 1.2 / 1.5 / 2.0	
CT- (STR) 300/W2	CT- (LHR) 300/W2	CT- (RHR)300/W2	300 - W2	50 / 75 / 100 / 150 / 200	1.0 / 1.2 / 1.5 / 2.0	
CT- (STR) 350/W2	CT- (LHR) 350/W2	CT- (RHR)350/W2	350 - W2	50 / 75 / 100 / 150 / 200	1.0 / 1.2 / 1.5 / 2.0	
CT- (STR) 400/W2	CT- (LHR) 400/W2	CT- (RHR)400/W2	400 - W2	50 / 75 / 100 / 150 / 200	1.0 / 1.2 / 1.5 / 2.0	AL (Aluminium)
CT- (STR) 450 /W2	CT- (LHR) 450/W2	CT- (RHR)450/W2	450 - W2	50 / 75 / 100 / 150 / 200	1.0 / 1.2 / 1.5 / 2.0	
CT- (STR) 500/W2	CT- (LHR) 500/W2	CT- (RHR)500/W2	500 - W2	50 / 75 / 100 / 150 / 200	1.0 / 1.2 / 1.5 / 2.0	
CT- (STR) 600/W2	CT- (LHR) 600/W2	CT- (RHR)600/W2	600 - W2	50 / 75 / 100 / 150 / 200	1.0 / 1.2 / 1.5 / 2.0	SS (Stainless Steel)
CT- (STR) 700/W2	CT- (LHR) 700/W2	CT- (RHR)700/W2	700 - W2	50 / 75 / 100 / 150 / 200	1.0 / 1.2 / 1.5 / 2.0	
CT- (STR) 750/W2	CT- (LHR) 750/W2	CT- (RHR)750/W2	750 - W2	50 / 75 / 100 / 150 / 200	1.0 / 1.2 / 1.5 / 2.0	
CT- (STR) 800/W2	CT- (LHR) 800/W2	CT- (RHR)800/W2	800 - W2	50 / 75 / 100 / 150 / 200	1.0 / 1.2 / 1.5 / 2.0	PC (Powder Coating)
CT- (STR) 900/W2	CT- (LHR) 900/W2	CT- (RHR)900/W2	900 - W2	50 / 75 / 100 / 150 / 200	1.0 / 1.2 / 1.5 / 2.0	
CT- (STR) 1000/W2	CT- (LHR) 1000/W2	CT- (RHR) 1000/W2	1000-W2	50 / 75 / 100 / 150 / 200	1.0 / 1.2 / 1.5 / 2.0	

Notes :

** Use Item Code "CT - (STR1 - C - W1/W2) " for Straight Reducer With Cover*

Please select the item code and fill the other size of reducer (W2) while ordering

Angle Connector

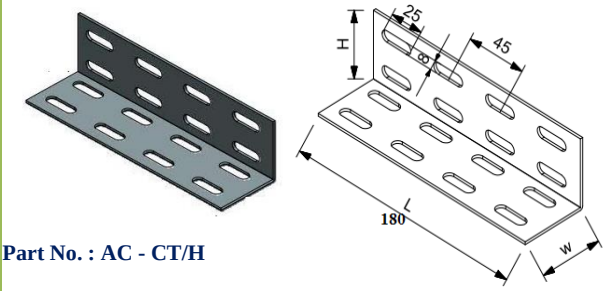

Part No. : AC - CT/H

Item Code/Part No	Size (H x W x L)	Thickness	Finish
AC - CT - 50/50	50 x 50 x 180 mm	1.0 mm	HDG
AC - CT - 60/50	60 x 50 x 180 mm		MG
AC - CT - 75/50	75 x 50 x 180 mm	1.2 mm	
AC - CT - 75/75	75 x 75 x 180 mm		ALU
AC - CT - 100/50	100 x 50 x 180 mm	1.5 mm	
AC - CT - 100/100	100 x 100 x 180 mm		S/S
AC - CT - 150/100	150 x 100 x 180 mm	2.0 mm	
AC - CT - 200/100	200 x 100 x 180 mm		PC

Straight Connector

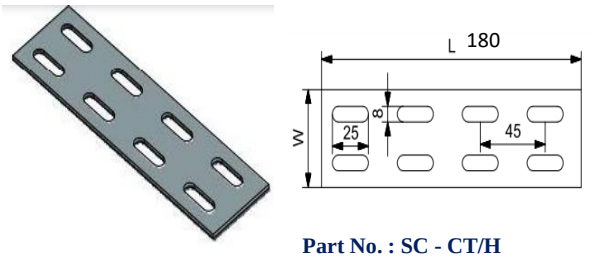

Part No. : SC - CT/H

Item Code/Part No	Size (H x L)	Thickness	Finish
SC - CT - 50	50 x 180 mm	1.0 mm	HDG
SC - CT - 60	60 x 180 mm		MG
SC - CT - 75	75 x 180 mm	1.2 mm	ALU
SC - CT - 100	100 x 180 mm	1.5 mm	
SC - CT - 150	150 x 180 mm	2.0 mm	S/S
AC - CT - 200	200 x 180 mm		PC

Vertical Adjustable Connector

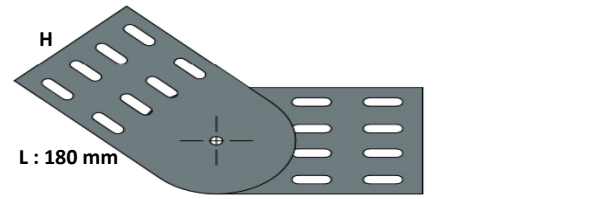

Height (As per C/Tray)

Part No : VAC - CT - H

Item Code/Part No	Size (H x L)	Thickness	Finish
VAC - CT - 50	50 x 180 mm	1.0 mm	HDG
VAC - CT - 60	60 x 180 mm		MG
VAC - CT - 75	75 x 180 mm	1.2 mm	ALU
VAC - CT - 100	100 x 180 mm	1.5 mm	
VAC - CT - 150	150 x 180 mm	2.0 mm	S/S
VAC - CT - 200	200 x 180 mm		PC

Bendable Splice Plate

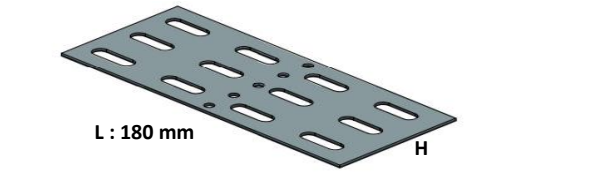

Height (As per C/Tray)

Part No :BSP - CT - H

Item Code/Part No	Size (H x L)	Thickness	Finish
BSP - CT - 50	50 x 180 mm	1.0 mm	HDG
BSP - CT - 60	60 x 180 mm		MG
BSP - CT - 75	75 x 180 mm	1.2 mm	ALU
BSP - CT - 100	100 x 180 mm	1.5 mm	
BSP - CT - 150	150 x 180 mm	2.0 mm	S/S
BSP - CT - 200	200 x 180 mm		PC

Box Connector

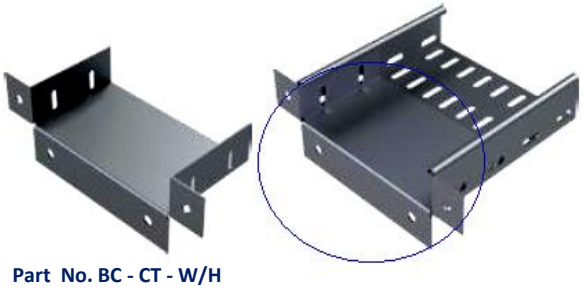

Part No. BC - CT - W/H

Part No.	Width	Height	Thickness	Finish
BC - CT - 100/H	100	50 mm	1.0 mm	HDG
BC - CT - 200/H	200	60 mm	1.2 mm	MG
BC - CT - 300/H	300	75 mm	1.5 mm	ALU
BC - CT - 400/H	400	100 mm	2.0 mm	S/S
BC - CT - 500/H	500	125 mm		PC
BC - CT - 600/H	600	150 mm		
BC - CT - 700/H	700			
BC - CT - 800/H	800			

Reducing Connector

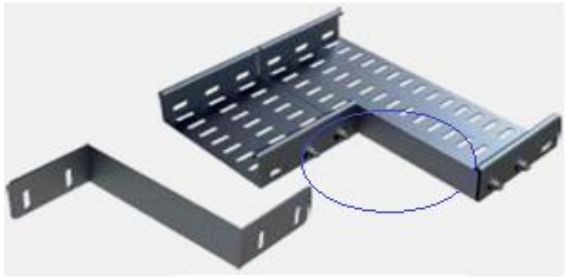

Part No. RC - CT - W

Part No.	Reducing Width	Thickness	Finish
RC - CT - 100	100 mm	1.0 mm	HDG
RC - CT - 200	200 mm	1.2 mm	MG
RC - CT - 300	300 mm	1.5 mm	ALU
RC - CT - 400	400 mm	2.0 mm	S/S
RC - CT - 500	500 mm		PC
RC - CT - 600	600 mm		
RC - CT - 700	700 mm		
RC - CT - 800	800 mm		

End Plate/ Blind End

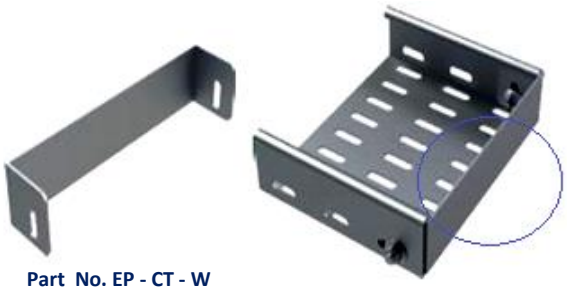

Part No. EP - CT - W

Part No.	Width	Height	Thickness	Finish
EP - CT - 100	100	50 mm	1.0 mm	HDG
EP - CT - 200	200	60 mm	1.2 mm	MG
EP - CT - 300	300	75 mm	1.5 mm	ALU
EP - CT - 400	400	100 mm	2.0 mm	S/S
EP - CT - 500	500	125 mm		PC
EP - CT - 600	600	150 mm		
EP - CT - 700	700			
EP - CT - 800	800			
EP - CT - 900	900			

Cover Fixing Clamp

Part No. CFC - CT

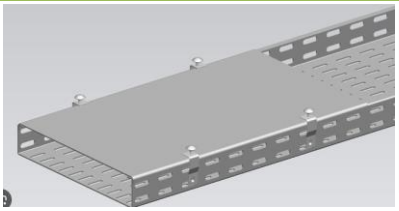

Part No.	Height	Thickness	Bolt Size	Finish
CFC - 50	50	1.0	6 mm	HDG
CFC - 75	75	1.2	8 mm	MG
CFC - 100	100	1.5	10 mm	ALU
EP - CT - 150	150	2.0	12 mm	S/S
EP - CT - 200	200			PC

Expansion Connector

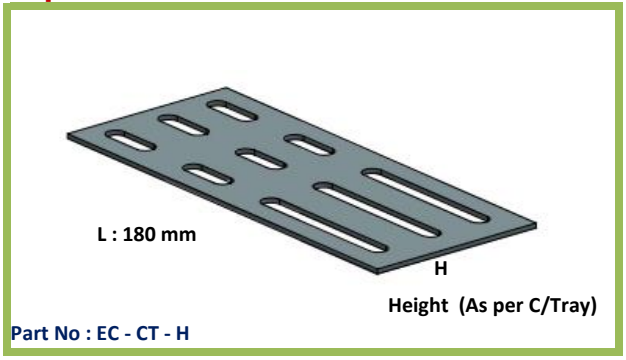

Part No.	Size (H x W x L)	Thickness	Finish
EC - CT - 50	50 x 50 x 180 mm	1.0 mm	HDG
EC - CT - 60	60 x 50 x 180 mm		
EC - CT - 75	75 x 50 x 180 mm	1.2 mm	MG
EC - CT - 100	75 x 75 x 180 mm		
EC - CT - 150	100 x 50 x 180 mm	1.5 mm	ALU
EC - CT - 200	100 x 100 x 180 mm		
		2.0 mm	S/S
			PC

Bendable Angle Connector

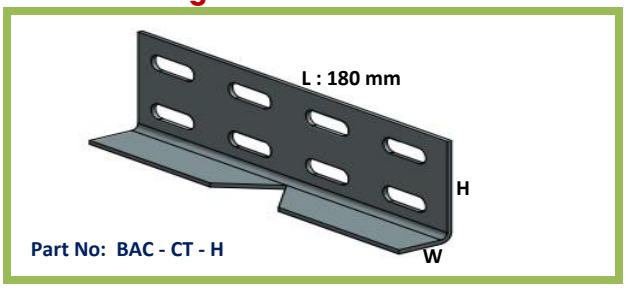

Part No.	Size (H x L)	Thickness	Finish
BAC- CT - 50	50 x 180 mm	1.0 mm	HDG
BAC- CT - 60	60 x 180 mm		MG
BAC- CT - 75	75 x 180 mm	1.2 mm	ALU
BAC- CT - 100	100 x 180 mm	1.5 mm	S/S
BAC- CT - 150	150 x 180 mm	2.0 mm	PC
BAC - CT - 200	200 x 180 mm		

Fish Plate Connector

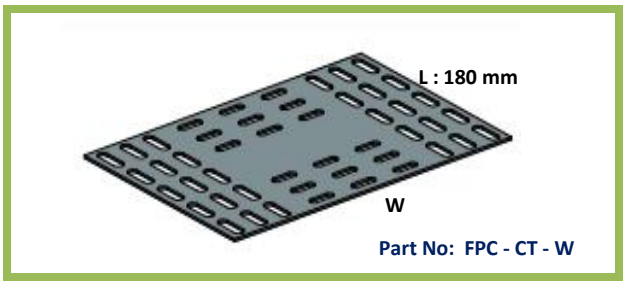

Part No.	Size (W x L)	Thickness	Finish
FPC - CT - 100	100 x 180 mm	1.0 mm	HDG
FPC - CT - 150	150 x 180 mm		MG
PFC - CT - 200	200 x 180 mm	1.2 mm	ALU
FPC - CT - 300	300 x 180 mm	1.5 mm	S/S
FPC - CT - 400	400 x 180 mm	2.0 mm	PC
PFC - CT - 500	500 x 180 mm		

U - Connector

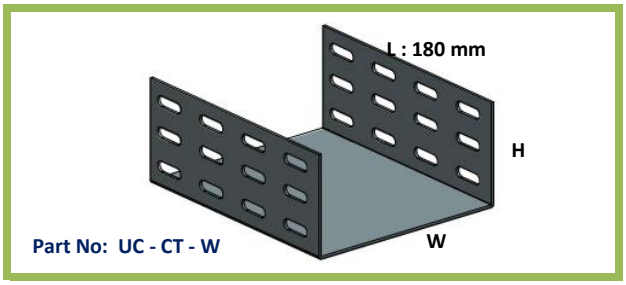

Part No.	Size (H x L)	Thickness	Finish
UC - CT - 100	100 x 180 mm	1.0 mm	HDG
UC - CT - 150	150 x 180 mm		MG
UC - CT - 200	200 x 180 mm	1.2 mm	ALU
UC - CT - 300	300 x 180 mm	1.5 mm	S/S
UC - CT - 400	400 x 180 mm	2.0 mm	PC
UC - CT - 500	500 x 180 mm		

Earth Bonding Jumper (Y/G Cable)

Part No.	Cable Size	Lug stud hole
EBJ - YG/4	4 mm^2 x 150 mm L	6 mm
EBJ - YG/6	6 mm^2 x 150 mm L	6 mm
EBJ - YG/8	8 mm^2 x 150 mm L	6 mm

Earth Bonding Jumper (Flexible Tinned Copper)

Part No.	Size	Lug stud hole
EBJ - BTC/4	4 mm^2 x 150 mm L	6 mm
EBJ - BTC/6	6 mm^2 x 200 mm L	6 mm
EBJ - BTC/10	6 mm^2 x 200 mm L	6 mm

Drop Out Plate (DO)

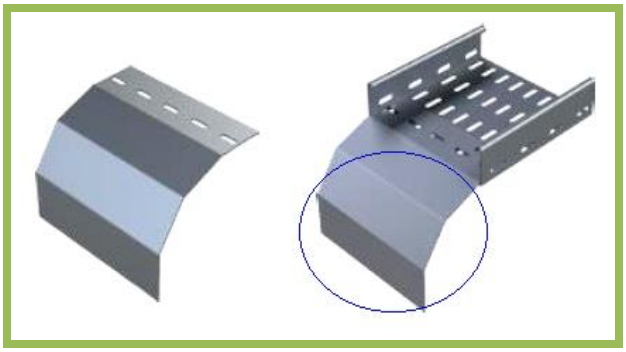

Part No.	Drop Out Width	Thickness	Finish
DO - CT - 100	100 mm	1.0 mm	HDG
DO - CT - 200	200 mm		
DO - CT - 300	300 mm	1.2 mm	MG
DO - CT - 400	400 mm		ALU
DO - CT - 500	500 mm	1.5 mm	
DO - CT - 600	600 mm		S/S
DO - CT - 700	700 mm	2.0 mm	PC
DO - CT - 800	800 mm		

Barrier Strip/Seperator (BS)

Part No.	Height	Length	Thickness	Finish
BS - CT - 50	50 mm	2.44 Mtr	1.0 mm	HDG
BS - CT - 60	60 mm			MG
BS - CT - 75	75 mm		1.2 mm	ALU
BS - CT - 100	100 mm	3 Mtr	1.5 mm	S/S
BS - CT - 125	125 mm		2.0 mm	PC
BS - CT - 150	150 mm			

Note : Other sizes available upon Reqeust

Cable Ladder Section

Al Fareed Stars

Swagged Tubular Type
Channel Type

CABLE LADDER - SWAGED TUBULAR RUNGS

TYPE : AFCL- 1

Part No. AFCL - 1(ST)/W

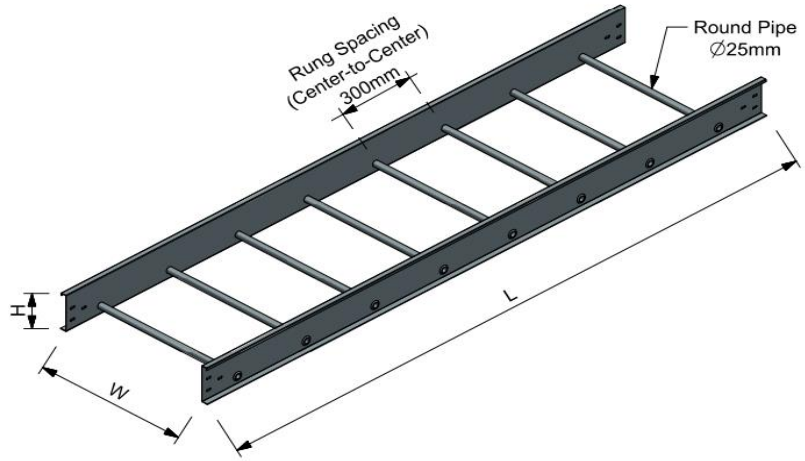

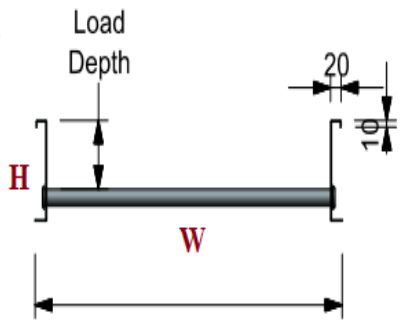

Item Code/ Part No.	Width(W) (mm)	Height (H) (mm)	Thickness (T) (mm)	Material Finish(F)
AFCL- 1 (ST) - 100	100	Side Rail Height : 75 (Inside Load Depth : 35)	1.5 2.0	HDG (Hot Dip Galvanized) MG (Mill Galvanized) ALU. (Aluminium) SS (Stainless Steel) PC (Powder Coating)
AFCL- 1 (ST) - 150	150			
AFCL- 1 (ST) - 200	200			
AFCL- 1 (ST) - 300	300	Side Rail Height : 100 (Inside Load Depth : 60)	**Length(L) (Mtr)**	
AFCL- 1 (ST) - 400	400			
AFCL- 1 (ST) - 450	450	Side Rail Height : 125 (Inside Load Depth : 85)	2.44 3.00 3.66	
AFCL- 1 (ST) - 500	500			
AFCL- 1 (ST) - 600	600	Side Rail Height : 135 (Inside Load Depth : 95)		
AFCL- 1 (ST) - 700	700		**Rung Spacing(RS) (mm)**	
AFCL- 1 (ST) - 750	750	Side Rail Height : 150 (Inside Load Depth : 110)		
AFCL- 1 (ST) - 800	800			
AFCL- 1 (ST) - 900	900	Side Rail Height : 175 (Inside Load Depth : 135)	300 225 150 100	
AFCL- 1 (ST) - 1000	1000			
AFCL- 1 (ST) - 1100	1100	Side Rail Height : 200 (Inside Load Depth : 160)		
AFCL- 1 (ST) - 1200	1200			

Ordering Guide :

AFCL-1 (ST)	(W)	(H)	(T)	(L)	(F)	(RS)
Item Type	Wdth	Height	Thickness	Length	Finish	Rung Space

Example :

AFCL-1(ST) - 300-100-2-2.44-HDG - 300

CABLE LADDER - CHANNEL TYPE RUNGS (50 x 25 mm)

TYPE : AFCL- 2

Part No. AFCL - 2(ST)/W

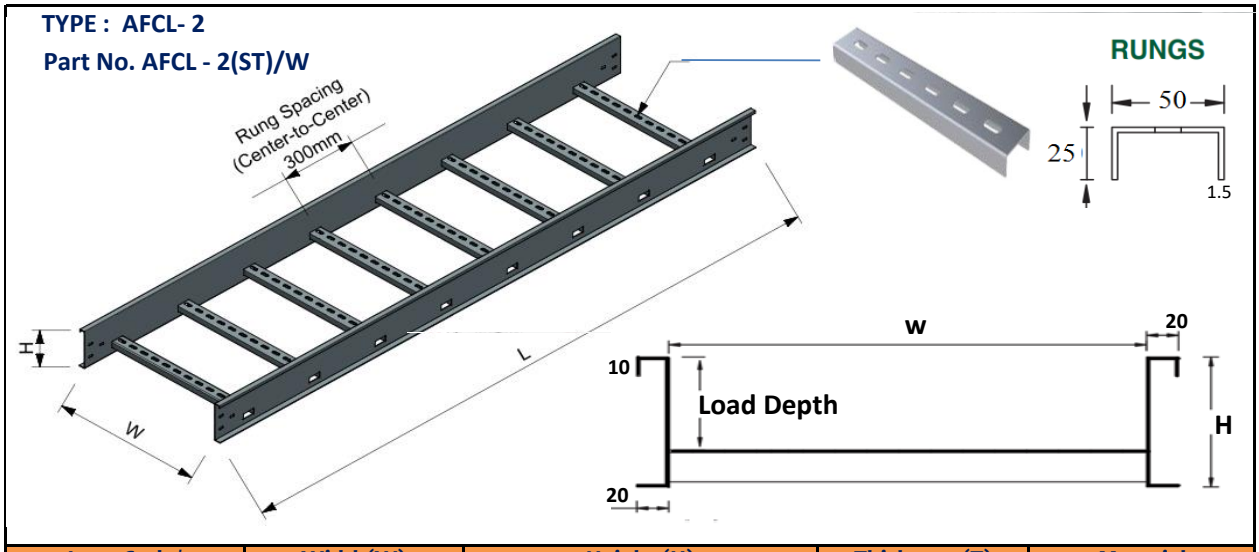

Item Code/ Part No.	Width(W) (mm)	Height (H) (mm)	Thickness (T) (mm)	Material Finish(F)
AFCL- 2 (ST) - 100	100	Side Rail Height : 75 (Inside Load Depth : 40)	1.5 2.0 2.5	MG (Mill Galvanize)
AFCL- 2 (ST) - 150	150			
AFCL- 2 (ST) - 200	200			
AFCL- 2 (ST) - 300	300	Side Rail Height : 100 (Inside Load Depth : 60)	Length(L) (Mtr)	
AFCL- 2 (ST) - 400	400			
AFCL- 2 (ST) - 450	450	Side Rail Height : 125 (Inside Load Depth : 90)	2.44 3.00 3.66	HDG (Hot Dip Galv.)
AFCL- 2 (ST) - 500	500			
AFCL- 2 (ST) - 600	600	Side Rail Height : 135 (Inside Load Depth : 100)		ALU. (Aluminium)
AFCL- 2 (ST) - 700	700		Rung Spacing(RS) (mm)	
AFCL- 2 (ST) - 750	750	Side Rail Height : 150 (Inside Load Depth : 115)		
AFCL- 2 (ST) - 800	800			
AFCL- 2 (ST) - 900	900	Side Rail Height : 175 (Inside Load Depth : 140)	300 225 150 100	SS (Stainless Steel)
AFCL- 2 (ST) - 1000	1000			
AFCL- 2 (ST) - 1100	1100	Side Rail Height : 200 (Inside Load Depth : 160)		PC (Powder Coating)
AFCL- 2 (ST) - 1200	1200			

Ordering Guide

AFCL-2(ST)	(W)	(H)	(T)	(L)	(F)	(RS)
Item Type	Wdth	Height	Thickness	Length	Finish	Rung Space

Example :

AFCL-2(ST) - 300-100-2-2.44-HDG - 300

CABLE LADDER - CHANNEL TYPE RUNGS (41 x 41mm)

TYPE : AFCL- 3

Part No. AFCL - 3(ST)/W

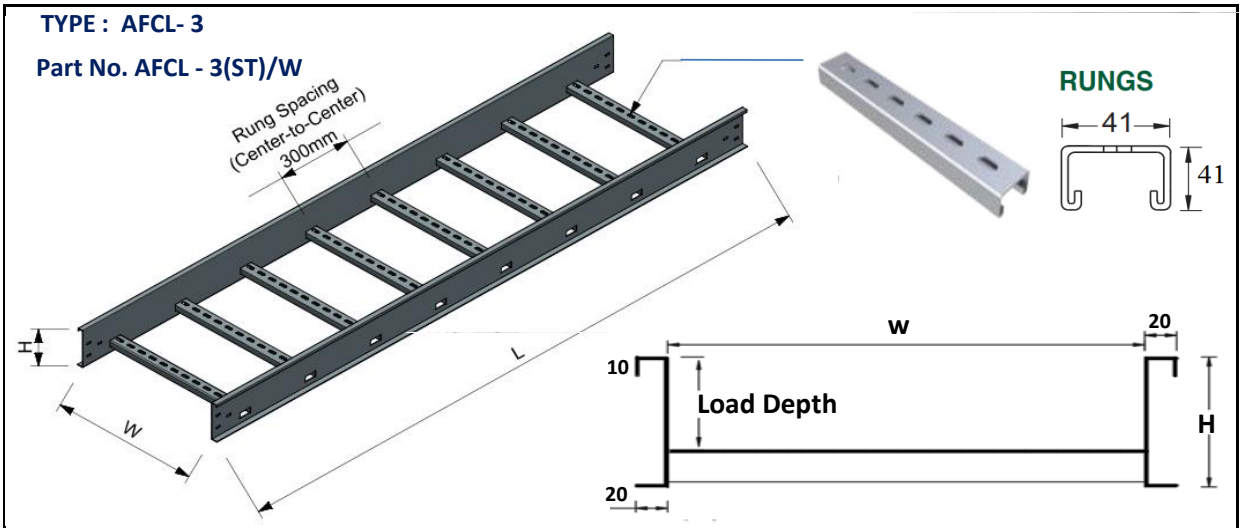

Item Code/ Part No.	Width(W) (mm)	Height (H) (mm)	Thickness (T) (mm)	Material Finish(F)
AFCL- 3 (ST) - 100	100	Side Rail Height : 75 (Inside Load Depth : 25)	1.5 2.0	MG (Mill Galvanize)
AFCL- 3 (ST) - 150	150			
AFCL- 3 (ST) - 200	200			
AFCL- 3 (ST) - 300	300	Side Rail Height : 100 (Inside Load Depth : 50)	**Length(L) (Mtr)**	
AFCL- 3 (ST) - 400	400			
AFCL- 3 (ST) - 450	450	Side Rail Height : 125 (Inside Load Depth : 75)	2.44 3.00 3.66	HDG (Hot Dip Galv.)
AFCL- 3 (ST) - 500	500			
AFCL- 3 (ST) - 600	600	Side Rail Height : 135 (Inside Load Depth : 85)		ALU. (Aluminium)
AFCL- 3 (ST) - 700	700		**Rung Spacing(RS) (mm)**	
AFCL- 3 (ST) - 750	750	Side Rail Height : 150 (Inside Load Depth : 100)		
AFCL- 3 (ST) - 800	800			
AFCL- 3 (ST) - 900	900	Side Rail Height : 175 (Inside Load Depth : 125)	300 225	SS (Stainless Steel)
AFCL- 3 (ST) - 1000	1000			
AFCL- 3 (ST) - 1100	1100	Side Rail Height : 200 (Inside Load Depth : 150)	150 100	PC (Powder Coating)
AFCL- 3 (ST) - 1200	1200			

Ordering Guide

AFCL-3(ST)	(W)	(H)	(T)	(L)	(F)	(RS)
Item Type	Wdth	Height	Thickness	Length	Finish	Rung Space

Example :

AFCL-3(ST) - 300-100-2-2.44-HDG - 300

CABLE LADDER - CHANNEL TYPE RUNGS (41 x 21mm)

TYPE : AFCL- 4
Part No. AFCL - 4(ST)/W

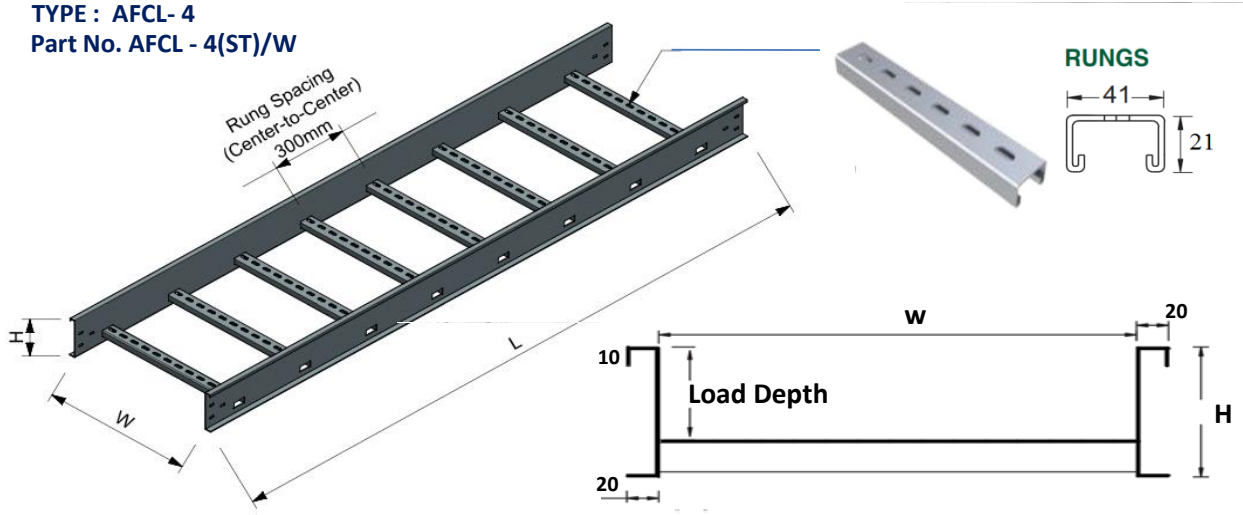

Item Code/ Part No.	Width(W) (mm)	Height (H) (mm)	Thickness (T) (mm)	Material Finish(F)
AFCL- 4 (ST) - 100	100	Side Rail Height : 75 (Inside Load Depth : 40)	1.5 2.0	MG (Mill Galvanize)
AFCL- 4 (ST) - 150	150			
AFCL- 4 (ST) - 200	200			
AFCL- 4 (ST) - 300	300	Side Rail Height : 100 (Inside Load Depth : 70)	**Length(L) (Mtr)**	
AFCL- 4 (ST) - 400	400			
AFCL- 4 (ST) - 450	450	Side Rail Height : 125 (Inside Load Depth : 95)	2.44 3.00 3.66	HDG (Hot Dip Galv.)
AFCL- 4 (ST) - 500	500			
AFCL- 4 (ST) - 600	600	Side Rail Height : 135 (Inside Load Depth : 100)		ALU. (Aluminium)
AFCL- 4 (ST) - 700	700		**Rung Spacing(RS) (mm)**	
AFCL- 4 (ST) - 750	750	Side Rail Height : 150 (Inside Load Depth : 115)		
AFCL- 4 (ST) - 800	800			
AFCL- 4 (ST) - 900	900	Side Rail Height : 175 (Inside Load Depth : 140)	300 225	SS (Stainless Steel)
AFCL- 4 (ST) - 1000	1000			
AFCL- 4 (ST) - 1100	1100	Side Rail Height : 200 (Inside Load Depth : 165)	150 100	PC (Powder Coating)
AFCL- 4 (ST) - 1200	1200			

Ordering Guide

AFCL-2(ST)	(W)	(H)	(T)	(L)	(F)	(RS)
Item Type	Wdth	Height	Thickness	Length	Finish	Rung Space

Example :

AFCL-2(ST) - 300-100-2-2.44-HDG - 300

CABLE LADDER - OTHER TYPES

TYPE : AFCL- 5 Part No. AFCL - 5(ST)/W

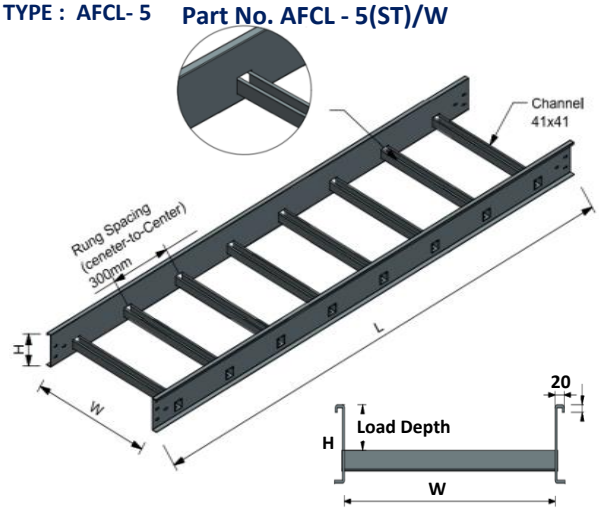

TYPE : AFCL- 6 Part No. AFCL - 6(ST)/W

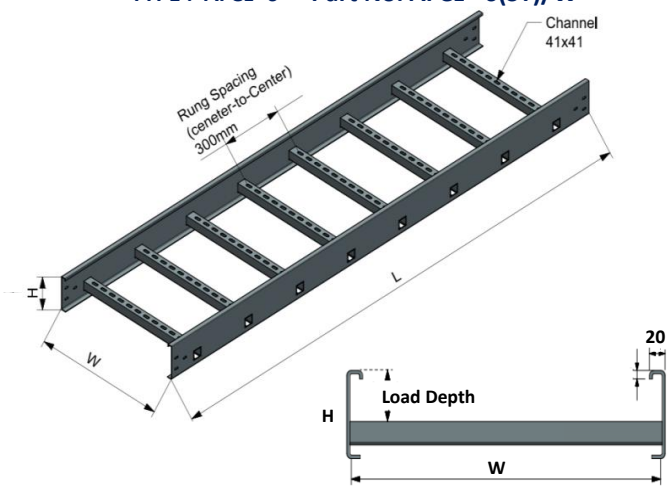

Item Code/ Part No.	Item Code/ Part No.	Width(W) (mm)	Height (H) (mm)	Thickness (T) (mm)	Material Finish(F)
AFCL- 5 (ST) - 100	AFCL- 6 (ST) - 100	100	Side Rail Height : 75 (Inside Load Depth : 35) Side Rail Height : 100 (Inside Load Depth : 60) Side Rail Height : 125 (Inside Load Depth : 85) Side Rail Height : 135 (Inside Load Depth : 95) Side Rail Height : 150 (Inside Load Depth : 110) Side Rail Height : 175 (Inside Load Depth : 135) Side Rail Height : 200 (Inside Load Depth : 160)	1.5 2.0 **Length(L) (Mtr)** 2.44 3.00 3.66 **Rung Spacing(RS) (mm)** 300 225 150 100	MG (Mill Galvanize) HDG (Hot Dip Galv.) ALU. (Aluminium) SS (Stainless Steel) PC (Powder Coating)
AFCL- 5 (ST) - 150	AFCL- 6 (ST) - 150	150			
AFCL- 5 (ST) - 200	AFCL- 6 (ST) - 200	200			
AFCL- 5 (ST) - 300	AFCL- 6 (ST) - 300	300			
AFCL- 5 (ST) - 400	AFCL- 6 (ST) - 400	400			
AFCL- 5 (ST) - 450	AFCL- 6 (ST) - 450	450			
AFCL- 5 (ST) - 500	AFCL- 6 (ST) - 500	500			
AFCL- 5 (ST) - 600	AFCL- 6 (ST) - 600	600			
AFCL- 5 (ST) - 700	AFCL- 6 (ST) - 700	700			
AFCL- 5 (ST) - 750	AFCL- 6 (ST) - 750	750			
AFCL- 5 (ST) - 800	AFCL- 6 (ST) - 800	800			
AFCL- 5 (ST) - 900	AFCL- 6 (ST) - 900	900			
AFCL- 5 (ST) - 1000	AFCL- 6 (ST) - 1000	1000			
AFCL- 5 (ST) - 1100	AFCL- 6 (ST) - 1100	1100			
AFCL- 5 (ST) - 1200	AFCL- 6 (ST) - 1200	1200			

Ordering Guide

AFCL-5(ST)	(W)	(H)	(T)	(L)	(F)	(RS)
Item Type	Wdth	Height	Thickness	Length	Finish	Rung Space

Example :

AFCL-5(ST) - 300-100-2-2.44-HDG - 300

90⁰ HORIZONTAL ELBOW

45⁰ HORIZONTAL ELBOW

Part No. LT - 90 HB-1

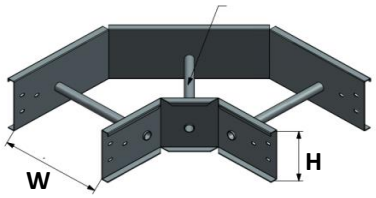

Part No. : LT - 90 HB -2

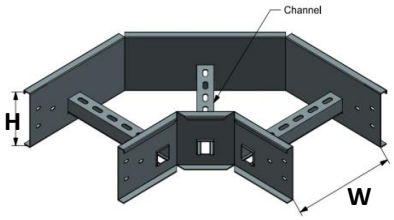

Technical Details

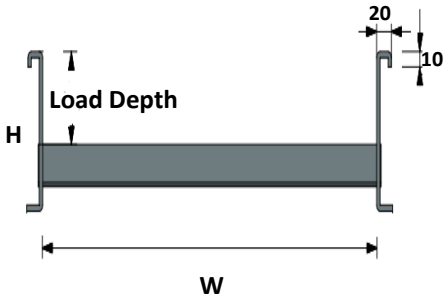

Part No. LT - 45 HB-1

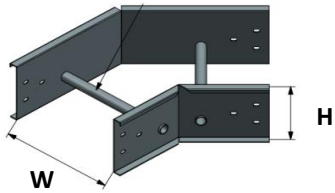

Part No. LT - 45 HB -2

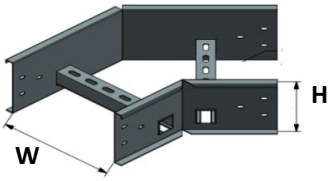

Item Code/ Part No.	Item Code/ Part No.	Width(W) (mm)	Height (H) (mm)	Thickness (T) (mm)	Material Finish(F)
LT - 90 HB - 1 - 100 LT - 90 HB - 2 - 100	LT - 45 HB - 1 - 100 LT - 45 HB - 2 - 100	100	Side Rail Height : 75 (Inside Load Depth : 35)	1.5 2.0	MG (Mill Galv.) HDG (Hot Dip Galv.) ALU. (Aluminium) SS (Stainless Steel) PC (Powder Coated)
LT - 90 HB - 1 - 150 LT - 90 HB - 2 - 150	LT - 45 HB - 1 - 150 LT - 45 HB - 2 - 150	150			
LT - 90 HB - 1 - 200 LT - 90 HB - 2 - 200	LT - 45 HB - 1 - 200 LT - 45 HB - 2 - 200	200	Side Rail Height : 100 (Inside Load Depth : 60)		
LT - 90 HB - 1 - 300 LT - 90 HB - 2 - 300	LT - 45 HB - 1 - 300 LT - 45 HB - 2 - 300	300		**Radius(R) (mm)**	
LT - 90 HB - 1 - 400 LT - 90 HB - 2 - 400	LT - 45 HB - 1 - 400 LT - 45 HB - 2 - 400	400	Side Rail Height : 125 (Inside Load Depth : 85)		
LT - 90 HB - 1 - 450 LT - 90 HB - 2 - 450	LT - 45 HB - 1 - 450 LT - 45 HB - 2 - 450	450		150 300 450 600 900	
LT - 90 HB - 1 - 500 LT - 90 HB - 2 - 500	LT - 45 HB - 1 - 500 LT - 45 HB - 2 - 500	500	Side Rail Height : 135 (Inside Load Depth : 95)		
LT - 90 HB - 1 - 600 LT - 90 HB - 2 - 600	LT - 45 HB - 1 - 600 LT - 45 HB - 2 - 600	600			
LT - 90 HB - 1 - 700 LT - 90 HB - 2 - 700	LT - 45 HB - 1 - 700 LT - 45 HB - 2 - 700	700	Side Rail Height : 150 (Inside Load Depth : 110)	**Rung Spacing(RS) (mm)**	**Ladder Type (LT)**
LT - 90 HB - 1 - 750 LT - 90 HB - 2 - 750	LT - 45 HB - 1 - 750 LT - 45 HB - 2 - 750	750			
LT - 90 HB - 1 - 800 LT - 90 HB - 2 - 800	LT - 45 HB - 1 - 800 LT - 45 HB - 2 - 800	800	Side Rail Height : 175 (Inside Load Depth : 135)	300	AFCL- 1 AFCL- 2
LT - 90 HB - 1 - 900 LT - 90 HB - 2 - 900	LT - 45 HB - 1 - 900 LT - 45 HB - 2 - 900	900	Side Rail Height : 200 (Inside Load Depth : 160)	225	AFCL- 3 AFCL- 4
LT - 90 HB - 1 - 1000 LT - 90 HB - 2 - 1000	LT - 45 HB - 1 - 1000 LT - 45 HB - 2 - 1000	1000		150	AFCL- 5 AFCL- 6

ORDERING GUIDE

LT (90 HB -1) (W) (H) (T) (F) (R)

Item Code Wdth Heigt Thickness LFinish Radius

Example :

AFCL-1(90HB - 1) - 450-100-2-HDG - 300

AFCL-1(45HB - 1) - 450-100-2-HDG - 300

HORIZONTAL TEE

(Tubular Type Rungs)

HORIZONTAL TEE

(Channel Type Rungs)

Part No : LT - HT - 1

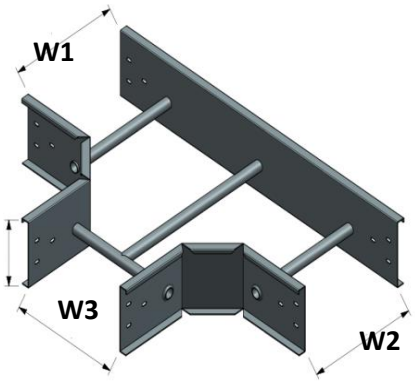

Technical Details

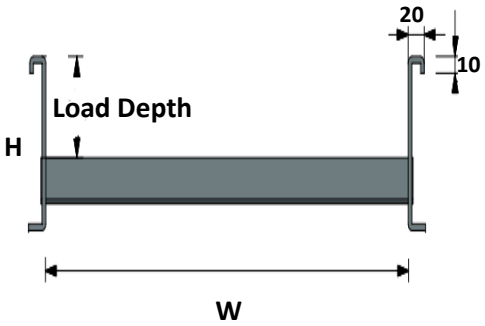

Part No : LT - HT - 2

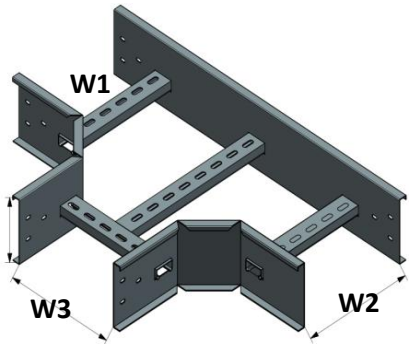

Item Code/ Part No.	Item Code/ Part No.	Width(W) (mm)	Height (H) (mm)	Thickness (T) (mm)	Material Finish(F)
LT - HT - 1 - 100	LT - HT - 2 - 100	100	Side Rail Height : 75 (Inside Load Depth : 35)	1.5 2.0 2.5	MG (Mill Galv.) HDG (Hot Dip Galv.) ALU. (Aluminium) SS (Stainless Steel) PC (Powder Coated)
LT - HT - 1 - 150	LT - HT - 2 - 150	150			
LT - HT - 1 - 200	LT - HT - 2 - 200	200	Side Rail Height : 100 (Inside Load Depth : 60)	**Radius(R) (mm)**	
LT - HT - 1 - 300	LT - HT - 2 - 300	300			
LT - HT - 1 - 400	LT - HT - 2 - 400	400	Side Rail Height : 125 (Inside Load Depth : 85)	150 300 450 600 900	
LT - HT - 1 - 450	LT - HT - 2 - 450	450			
LT - HT - 1 - 500	LT - HT - 2 - 500	500	Side Rail Height : 135 (Inside Load Depth : 95)		
LT - HT - 1 - 600	LT - HT - 2 - 600	600			
LT - HT - 1 - 700	LT - HT - 2 - 700	700	Side Rail Height : 150 (Inside Load Depth : 110)	**Rung Spacing(RS) (mm)**	**Ladder Type (LT)**
LT - HT - 1 - 750	LT - HT - 2 - 750	750			
LT - HT - 1 - 800	LT - HT - 2 - 800	800	Side Rail Height : 175 (Inside Load Depth : 135)	300 225 150 250 100	AFCL- 1 AFCL- 2 AFCL- 3 AFCL- 4 AFCL- 5 AFCL- 6
LT - HT - 1 - 900	LT - HT - 2 - 900	900			
LT - HT - 1 - 1000	LT - HT - 2 - 1000	1000	Side Rail Height : 200 (Inside Load Depth : 160)		
LT - HT - 1 - 1200	LT - HT - 2 - 1200	1200			

ORDERING GUIDE

LT (HT)	(W)	(H)	(T)	(F)	(R)
Item Code	Wdth	Heigl	Thickness	LFinish	Radius

Example :

AFCL-1(HT - 1) - 450-100-2-HDG - 300

90⁰ VERTICAL OUTSIDE RISER

45⁰ VERTICAL OUTSIDE RISER

Part No : LT - 90 OR - 1

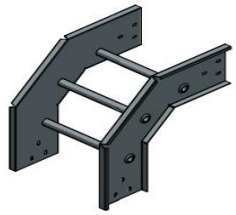

Part No : LT - 90 OR - 2

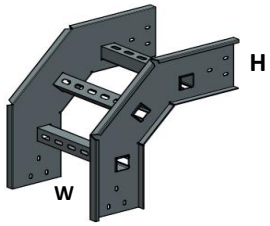

Technical Details

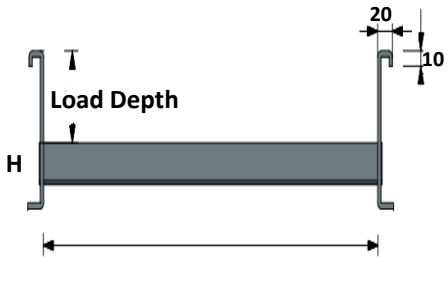

Part No. LT - 45 OR - 1

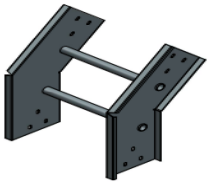

Part No LT - 45 OR - 2

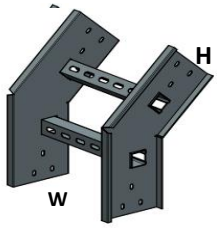

Item Code/ Part No.	Item Code/ Part No.	Width(W) (mm)	Height (H) (mm)	Thickness (T) (mm)	Material Finish(F)
LT - 90 OR - 1 / 100 LT - 90 OR - 2 / 100	LT - 45 OR - 1 / 100 LT - 45 OR - 2 / 100	100	Side Rail Height : 75 (Inside Load Depth : 35)	1.5 2.0	MG (Mill Galv.) HDG (Hot Dip Galv.) ALU. (Aluminium) SS (Stainless Steel) PC (Powder Coated)
LT - 90 OR - 1 / 150 LT - 90 OR - 2 / 150	LT - 45 OR - 1 / 150 LT - 45 OR - 2 / 150	150			
LT - 90 OR - 1 / 200 LT - 90 OR - 2 / 200	LT - 45 OR - 1 / 200 LT - 45 OR - 2 / 200	200			
LT - 90 OR - 1 / 300 LT - 90 OR - 2 / 300	LT - 45 OR - 1 / 300 LT - 45 OR - 2 / 300	300	Side Rail Height : 100 (Inside Load Depth : 60)	**Radius(R) (mm)**	
LT - 90 OR - 1 / 400 LT - 90 OR - 2 / 400	LT - 45 OR - 1 / 400 LT - 45 OR - 2 / 400	400			
LT - 90 OR - 1 / 450 LT - 90 OR - 2 / 450	LT - 45 OR - 1 / 450 LT - 45 OR - 2 / 450	450	Side Rail Height : 125 (Inside Load Depth : 85)	150 300 450 600 900	
LT - 90 OR - 1 / 500 LT - 90 OR - 2 / 500	LT - 45 OR - 1 / 500 LT - 45 OR - 2 / 500	500			
LT - 90 OR - 1 / 600 LT - 90 OR - 2 / 600	LT - 45 OR - 1 / 600 LT - 45 OR - 2 / 600	600	Side Rail Height : 135 (Inside Load Depth : 95)		
LT - 90 OR - 1 / 700 LT - 90 OR - 2 / 700	LT - 45 OR - 1 / 700 LT - 45 OR - 2 / 700	700	Side Rail Height : 150 (Inside Load Depth : 110)	**Rung Spacing(RS) (mm)**	**Ladder Type (LT)**
LT - 90 OR - 1 / 750 LT - 90 OR - 2 / 750	LT - 45 OR - 1 / 750 LT - 45 OR - 2 / 750	750			
LT - 90 OR - 1 / 800 LT - 90 OR - 2 / 800	LT - 45 OR - 1 / 800 LT - 45 OR - 2 / 800	800	Side Rail Height : 175 (Inside Load Depth : 135)	300 225 150	AFCL- 1 AFCL- 2 AFCL- 3 AFCL- 4 AFCL- 5 AFCL- 6
LT - 90 OR - 1 / 900 LT - 90 OR - 2 / 900	LT - 45 OR - 1 / 900 LT - 45 OR - 2 / 900	900			
LT - 90 OR - 1 / 1000 LT - 90 OR - 2 / 1000	LT - 45 OR - 1 / 1000 LT - 45 OR - 2 / 1000	1000	Side Rail Height : 200 (Inside Load Depth : 160)		

ORDERING GUIDE

LT (90OR) — Item Code | (W) — Wdth | (H) — Heigt | (T) — Thickness | (F) — LFinish | (R) — Radius

Example :

AFCL-1(90 OR - 1) - 450-100-2-HDG - 300

AFCL-1(45 OR - 1) - 450-100-2-HDG - 300

HORIZONTAL TEE
(Tubular Type Rungs)

HORIZONTAL TEE
(Channel Type Rungs)

Part No : LT - HT - 1

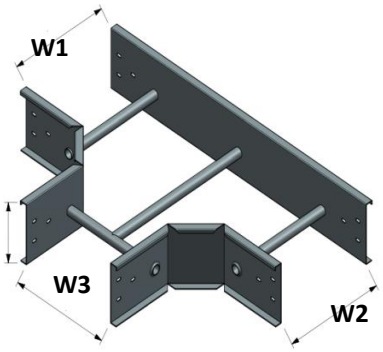

Technical Details

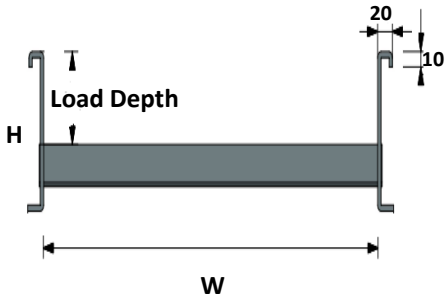

Part No : LT - HT - 2

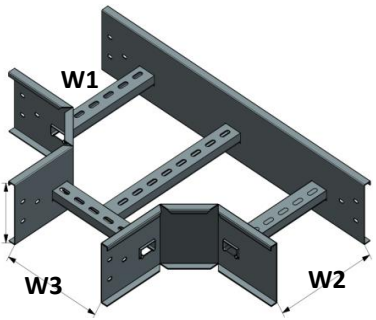

Item Code/ Part No.	Item Code/ Part No.	Width(W) (mm)	Height (H) (mm)	Thickness (T) (mm)	Material Finish(F)
LT - HT - 1 - 100	LT - HT - 2 - 100	100		1.5 2.0	MG (Mill Galv.) HDG (Hot Dip Galv.) ALU. (Aluminium) SS (Stainless Steel) PC (Powder Coated)
LT - HT - 1 - 150	LT - HT - 2 - 150	150	Side Rail Height : 75 (Inside Load Depth : 35)		
LT - HT - 1 - 200	LT - HT - 2 - 200	200			
LT - HT - 1 - 300	LT - HT - 2 - 300	300	Side Rail Height : 100 (Inside Load Depth : 60)	**Radius(R) (mm)**	
LT - HT - 1 - 400	LT - HT - 2 - 400	400			
LT - HT - 1 - 450	LT - HT - 2 - 450	450	Side Rail Height : 125 (Inside Load Depth : 85)	150 300 450 600 900	
LT - HT - 1 - 500	LT - HT - 2 - 500	500			
LT - HT - 1 - 600	LT - HT - 2 - 600	600	Side Rail Height : 135 (Inside Load Depth : 95)		
LT - HT - 1 - 700	LT - HT - 2 - 700	700	Side Rail Height : 150 (Inside Load Depth : 110)	**Rung Spacing(RS) (mm)**	**Ladder Type (LT)**
LT - HT - 1 - 750	LT - HT - 2 - 750	750			
LT - HT - 1 - 800	LT - HT - 2 - 800	800	Side Rail Height : 175 (Inside Load Depth : 135)	300 225 150	AFCL- 1 AFCL- 2 AFCL- 3 AFCL- 4 AFCL- 5 AFCL- 6
LT - HT - 1 - 900	LT - HT - 2 - 900	900			
LT - HT - 1 - 1000	LT - HT - 2 - 1000	1000	Side Rail Height : 200 (Inside Load Depth : 160)		

ORDERING GUIDE

LT (HT)	(W)	(H)	(T)	(F)	(R)
Item Code	Wdth	Heigt	Thickness	LFinish	Radius

Example :

AFCL-1(HT - 1) - 450-100-2-HDG - 300

HORIZONTAL CROSS
(Tubular Type Rungs)

HORIZONTAL CROSS
(Channel Type Rungs)

Part No : LT - HC - 1

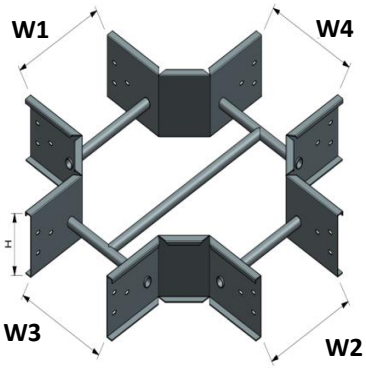

Technical Details

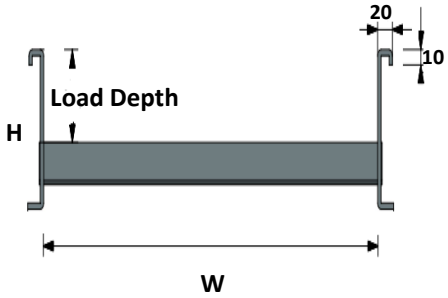

Part No.: LT - HC - 2

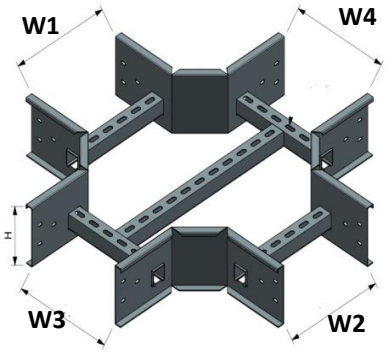

Item Code/ Part No.	Item Code/ Part No.	Width(W) (mm)	Height (H) (mm)	Thickness (T) (mm)	Material Finish(F)
LT - HC - 1 - 100	LT - HC - 2 - 100	100		1.5	MG (Mill Galv.)
LT - HC - 1 - 150	LT - HC - 2 - 150	150	Side Rail Height : 75 (Inside Load Depth : 35)		
LT - HC - 1 - 200	LT - HC - 2 - 200	200		2.0	HDG (Hot Dip Galv.)
LT - HC - 1 - 300	LT - HC - 2 - 300	300	Side Rail Height : 100 (Inside Load Depth : 60)	Radius(R) (mm)	
LT - HC - 1 - 400	LT - HC - 2 - 400	400			ALU. (Aluminium)
LT - HC - 1 - 450	LT - HC - 2 - 450	450	Side Rail Height : 125 (Inside Load Depth : 85)	150 300 450 600 900	SS (Stainless Steel) PC (Powder Coated)
LT - HC - 1 - 500	LT - HC - 2 - 500	500			
LT - HC - 1 - 600	LT - HC - 2 - 600	600	Side Rail Height : 135 (Inside Load Depth : 95)		
LT - HC - 1 - 700	LT - HC - 2 - 700	700		Rung Spacing(RS) (mm)	Ladder Type (LT)
LT - HC - 1 - 750	LT - HC - 2 - 750	750	Side Rail Height : 150 (Inside Load Depth : 110)	300	AFCL- 2 AFCL- 3
LT - HC - 1 - 800	LT - HC - 2 - 800	800			
LT - HC - 1 - 900	LT - HC - 2 - 900	900	Side Rail Height : 175 (Inside Load Depth : 135)	225	AFCL- 4 AFCL- 5
LT - HC - 1 - 1000	LT - HC - 2 - 1000	1000			

ORDERING GUIDE

LT (HC) Item Code | (W) Wdth | (H) Heigt | (T) Thickness | (F) LFinish | (R) Radius

Example :

AFCL-1(HC - 1) - 450-100-2-HDG - 300

REDUCERS

Tubular Type Rungs

Item Name : Straight Reducer Part No : LT - STR - 1 - 1	Item Name : Right hand Reducer Part No : LT - RHR - 1 - 1	Item Name : Left hand Reducer Part No : LT - LHR - 1 - 1
	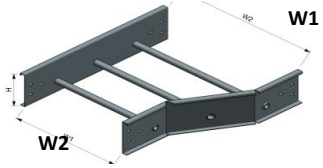	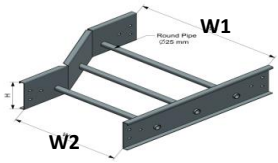

Channel Type Rungs

Item Name : Straight Reducer Part No : LT - STR - 1 - 2	Item Name : Right hand Reducer Part No : LT - RHR - 1 - 2	Item Name : Left hand Reducer Part No : LT - LHR - 1 - 2
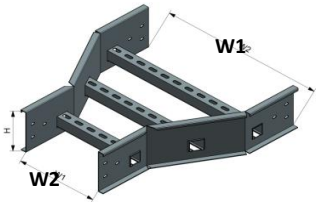	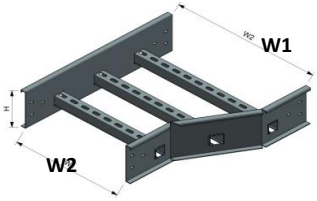	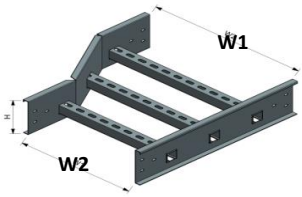

Item Code/ Part No.	Item Code/ Part No.	Item Code/ Part No.	Height (H) (mm)	Thickness (T) (mm)	Material Finish(F)
LT - STR - 1 - 100 LT - STR - 2 - 100	LT - LHR - 1 - 100 LT - LHR - 2 - 100	LT - RHR - 1 - 100 LT - RHR - 2 - 100	Side Rail Height : 75 (Inside Load Depth : 35)	1.5 2.0	MG (Mill Galv.) HDG (Hot Dip Galv.) ALU. (Aluminium) SS (Stainless Steel) PC (Powder Coated)
LT - STR - 1 - 150 LT - STR - 2 - 150	LT - LHR - 1 - 150 LT - LHR - 2 - 150	LT - RHR - 1 - 150 LT - RHR - 2 - 150			
LT - STR - 1 - 200 LT - STR - 2 - 200	LT - LHR - 1 - 200 LT - LHR - 2 - 200	LT - RHR - 1 - 200 LT - RHR - 2 - 200	Side Rail Height : 100 (Inside Load Depth : 60)		
LT - STR - 1 - 300 LT - STR - 2 - 300	LT - LHR - 1 - 300 LT - LHR - 2 - 300	LT - RHR - 1 - 300 LT - RHR - 2 - 300		Radius(R) (mm)	
LT - STR - 1 - 400 LT - STR - 2 - 400	LT - LHR - 1 - 400 LT - LHR - 2 - 400	LT - RHR - 1 - 400 LT - RHR - 2 - 400	Side Rail Height : 125 (Inside Load Depth : 85)		
LT - STR - 1 - 450 LT - STR - 2 - 450	LT - LHR - 1 - 450 LT - LHR - 2 - 450	LT - RHR - 1 - 450 LT - RHR - 2 - 450		150 300 450 600 900	
LT - STR - 1 - 500 LT - STR - 2 - 500	LT - LHR - 1 - 500 LT - LHR - 2 - 500	LT - RHR - 1 - 500 LT - RHR - 2 - 500	Side Rail Height : 135 (Inside Load Depth : 95)		
LT - STR - 1 - 600 LT - STR - 2 - 600	LT - LHR - 1 - 600 LT - LHR - 2 - 600	LT - RHR - 1 - 600 LT - RHR - 2 - 600			
LT - STR - 1 - 700 LT - STR - 2 - 700	LT - LHR - 1 - 700 LT - LHR - 2 - 700	LT - RHR - 1 - 700 LT - RHR - 2 - 700	Side Rail Height : 150 (Inside Load Depth : 110)	Rung Spacing(RS) (mm)	Ladder Type (LT)
LT - STR - 1 - 750 LT - STR - 2 - 750	LT - LHR - 1 - 750 LT - LHR - 2 - 750	LT - RHR - 1 - 750 LT - RHR - 2 - 750			
LT - STR - 1 - 800 LT - STR - 2 - 800	LT - LHR - 1 - 800 LT - LHR - 2 - 800	LT - RHR - 1 - 800 LT - RHR - 2 - 800	Side Rail Height : 175 (Inside Load Depth : 135)	300	AFCL- 1 AFCL- 2
LT - STR - 1 - 900 LT - STR - 2 - 900	LT - LHR - 1 - 900 LT - LHR - 2 - 900	LT - RHR - 1 - 900 LT - RHR - 2 - 900	Side Rail Height : 200 (Inside Load Depth : 160)	225	AFCL- 3 AFCL- 4
LT - STR - 1 - 1000 LT - STR - 2 - 1000	LT - LHR - 1 - 1000 LT - LHR - 2 - 1000	LT - RHR - 1 - 1000 LT - RHR - 2 - 1000		150	AFCL- 5 AFCL- 6

ORDERING GUIDE

LT (STR -1)	(W1)	(W2)	(H)	(T)	(F)	(R)
Item Code	Wdth	Wdth	Height	Thickness	LFinish	Radius

Example :

AFCL-1(STR - 1) - 400-300 - 100-2-HDG - 300

Straight Connector

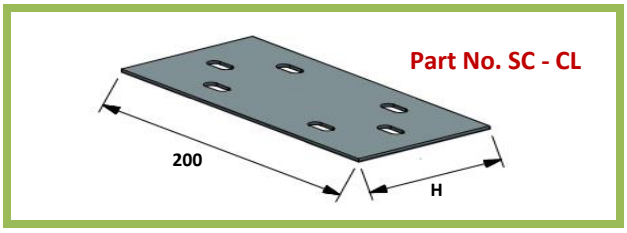

Part No.	Size (W x L)	Thickness	Finish
SC - CL - 100/200	100 x 200 mm	1.5 mm	HDG
SC - CL - 125/200	125 x 200 mm		MG
SC - CL - 135/200	135 x 200 mm	2.0 mm	ALU
SC - CL - 150/200	150 x 200 mm	2.5 mm	S/S
SC - CL - 200/200	200 x 200 mm		PC

Vertical Adjustable Connector

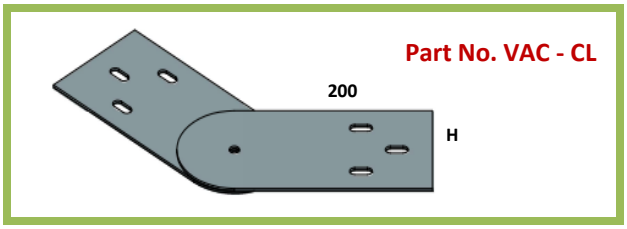

Part No.	Size (H x L)	Thickness	Finish
VAC - CL - 100/200	100 x 200 mm	1.5 mm	HDG
VAC - CL - 125/200	125 x 200 mm		MG
VAC - CL - 135/200	135 x 200 mm	2.0 mm	ALU
VAC - CL - 150/200	150 x 200 mm	2.5 mm	S/S
VAC - CL - 200/200	200 x 200 mm		PC

Horizontal Adjustable Connector

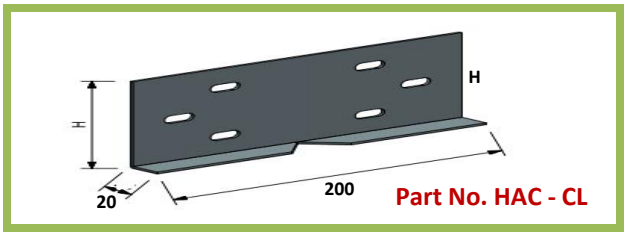

Part No.	Size (H x L)	Thickness	Finish
HAC - CL - 100/200	100 x 200 mm	1.5 mm	HDG
HAC - CL - 125/200	125 x 200 mm		MG
HAC - CL - 135/200	135 x 200 mm	2.0 mm	ALU
HAC - CL - 150/200	150 x 200 mm	2.5 mm	S/S
HAC - CL - 200/200	200 x 200 mm		PC

Angle Connector

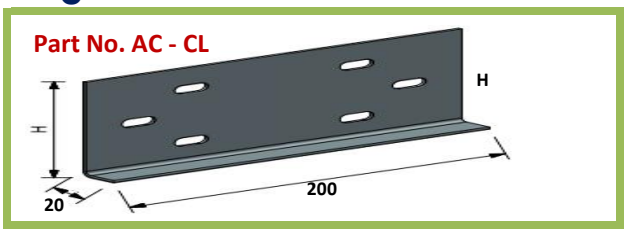

Part No.	Size (H x L)	Thickness	Finish
AC - CL - 100/200	100 x 200 mm	1.5 mm	HDG
AC - CL - 125/200	125 x 200 mm		MG
AC - CL - 135/200	135 x 200 mm	2.0 mm	ALU
AC - CL - 150/200	150 x 200 mm	2.5 mm	S/S
AC - CL - 200/200	200 x 200 mm		PC

Expansion Connector

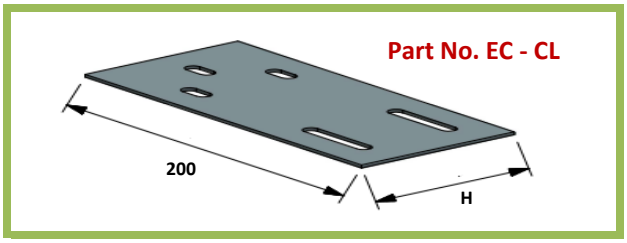

Part No.	Size (H x L)	Thickness	Finish
EC - CL - 100/200	100 x 200 mm	1.5 mm	HDG
EC - CL - 125/200	125 x 200 mm		MG
EC - CL - 135/200	135 x 200 mm	2.0 mm	ALU
EC - CL - 150/200	150 x 200 mm	2.5 mm	S/S
EC - CL - 200/200	200 x 200 mm		PC

End Cap / Blind End

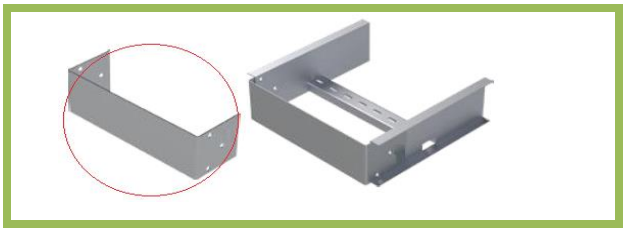

Part No.	Size (W x H)	Thickness	Finish
BE - CL - W / 100H	W x 100 H	1.5 mm	HDG
BE - CL - W / 125H	W x 125 H		MG
BE - CL - W / 135H	W x 135 H	2.0 mm	ALU
BE - CL - W / 150H	W x 150 H	2.5 mm	S/S
BE - CL - W / 200H	W x 200 H		PC

Drop Out for Ladder

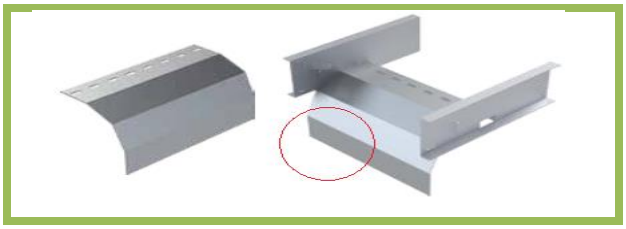

Part No.	Size (W)	Thickness	Finish
DO - CL - W	100 mm	1.5 mm	HDG
DO - CL - W	200 mm		MG
DO - CL - W	300 mm	2.0 mm	ALU
DO - CL - W	400 mm	2.5 mm	S/S
DO - CL - W	500 mm		PC

Barrier Strip/ Divider

Part No.	Size (H x L)	Thickness	Finish
BS - CL - 100	100 x 2.44 / 3.0	1.5 mm	HDG
BS - CL - 125	125 x 2.44 / 3.0		MG
BS - CL - 135	135 x 2.44 / 3.0	2.0 mm	ALU
BS - CL - 150	150 x 2.44 / 3.0	2.5 mm	S/S
BS - CL - 200	200 x 2.44 / 3.0		PC

Hold Down Clamp

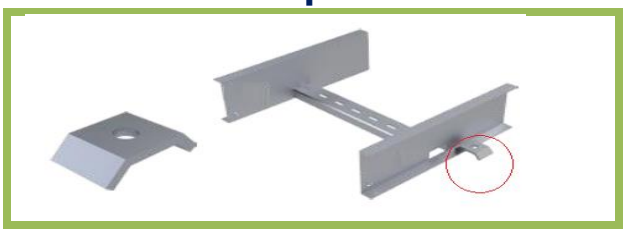

Part No.	Size (W)	Thickness	Finish
HDC - CL	40 mm	4 mm	HDG MG ALU S/S PC

Hold Down Bracket

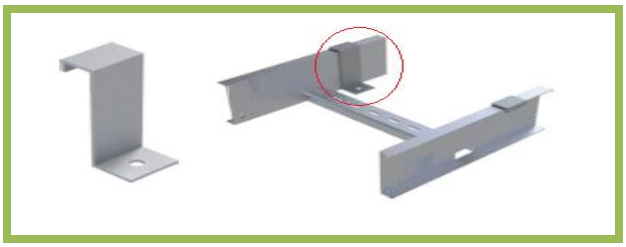

Part No.	Size (W x H)	Thickness	Finish
HDB - CL	40 x 100 H	4 mm	HDG
	40 x 125 H		MG
	40 x 135 H		ALU
	40 x 150 H		S/S
	40 x 200 H		PC

Solid Flanged Cover

Ventilated Cover

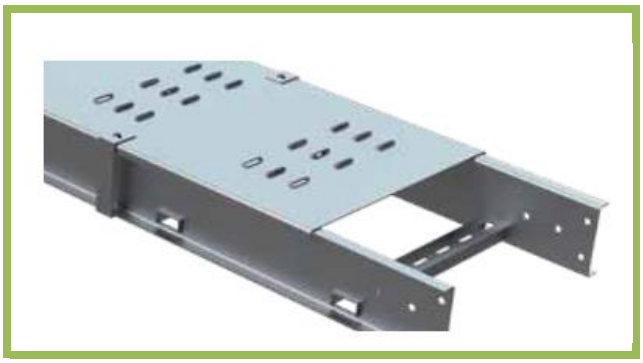

90° Elbow Cover

45° Elbow Cover

Tee° Cover

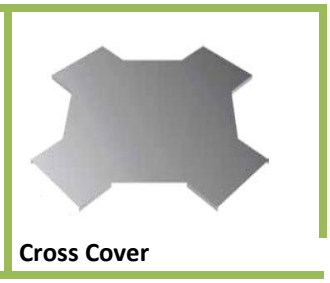

Cross Cover

90° Inside Riser Cover

90° Outside Riser Cover

Straight Reducer Cover

Left Hand Reducer Cover

Right Hand Reducer Cover

Cover Fixing Clamp

Cable Trunking Section

Over Floor/Ceiling Trunking
Under Floor Trunking
Flush Floor Trunking

CABLE TRUNKING FOR RAISED FLOOR AND CEILING

TYPE : AFTR- 1

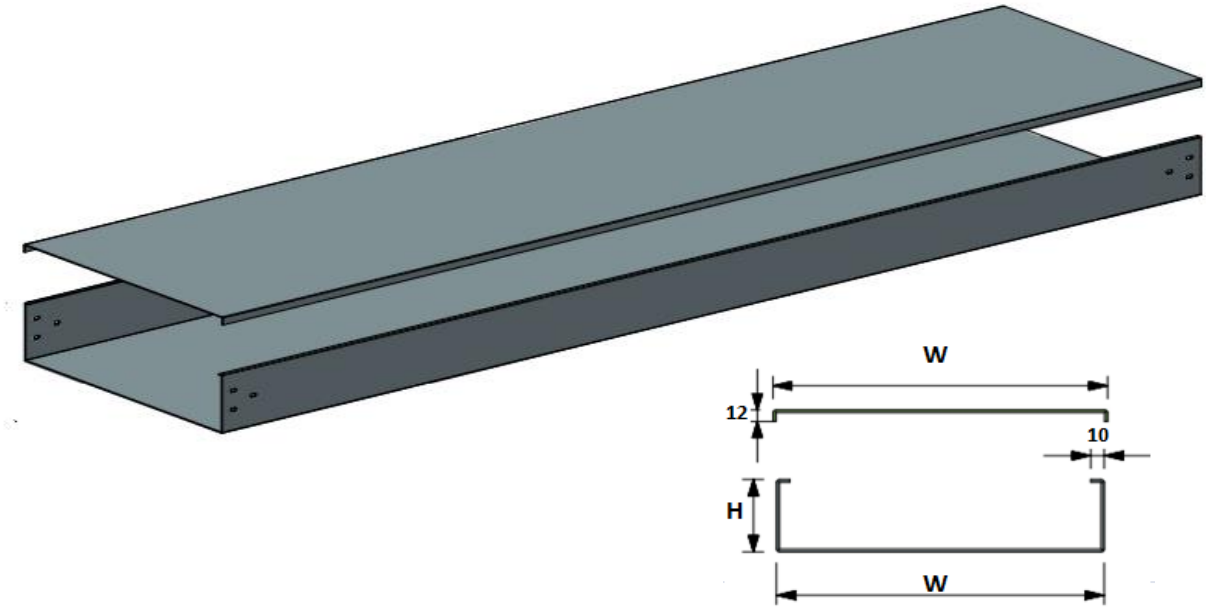

Item Code/ Part No.	Width(W) (mm)	Height (H) (mm)	Thickness (T) (mm)	Length(L) (Mtr)
AFTR- 1C (ST) - 50 / H	50	50	1.0	
AFTR- 1C (ST) - 75 / H	75	75	1.2	2.44
AFTR- 1C (ST) - 100 / H	100	100	1.5	3.00
AFTR- 1C (ST) - 150 / H	150	150	2.0	
AFTR- 1C (ST) - 200 / H	200	200	3.0	
AFTR- 1C (ST) - 300 / H	300	Compartments (C)	Finish (F)	Cover Type
AFTR- 1C (ST) - 400 / H	400			
AFTR- 1C (ST) - 450 / H	450	1 2	MG HDG	Screw Fix
AFTR- 1C (ST) - 500 / H	500	3 4	ALU.	Easy lock
AFTR- 1C (ST) - 600 / H	600	5 6	SS PC	Ventilated/ louvered

Ordering Guide

AFTR- 1C (ST) (W) (H) (T) (L) (F)

Item Type | Wdth | Height | Thickness | Length | Finish

Example :

AFTR-1(ST) - 200-50-1.5-2.44-HDG

CABLE TRUNKING FOR RAISED FLOOR AND CEILING

TYPE : AFTR- 1

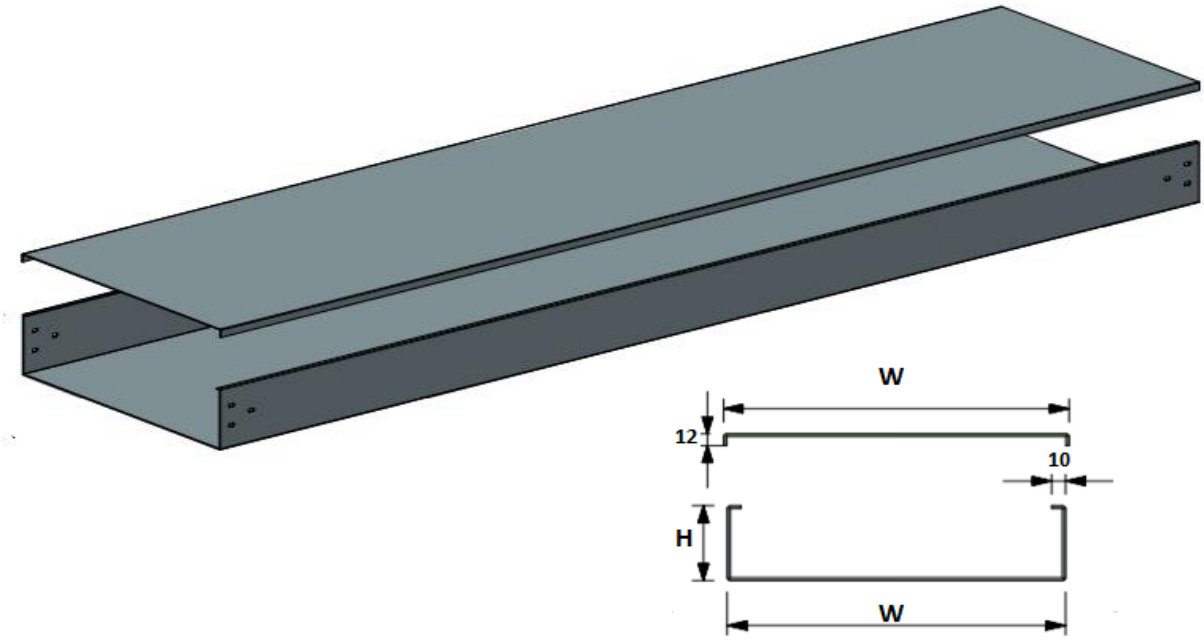

Item Code/ Part No.	Width(W) (mm)	Height (H) (mm)	Thickness (T) (mm)	Finish (F)	Length(L) (Mtr)
AFTR- 1C (ST) - 50 / H	50	50	1.0 / 1.2 / 1.5 / 2.0	MG / HDG / AL / SS	2.44 3.00
AFTR- 1C (ST) - 75 / H	75	50 / 75	1.0 / 1.2 / 1.5 / 2.0	MG / HDG / AL / SS	
AFTR- 1C (ST) - 100 / H	100	50 / 75 / 100	1.0 / 1.2 / 1.5 / 2.0	MG / HDG / AL / SS	
AFTR- 1C (ST) - 150 / H	150	50 / 75 / 100 / 150	1.0 / 1.2 / 1.5 / 2.0	MG / HDG / AL / SS	
AFTR- 1C (ST) - 200 / H	200	50 / 75 / 100 / 150 / 200	1.0 / 1.2 / 1.5 / 2.0	MG / HDG / AL / SS	
AFTR- 1C (ST) - 300 / H	300	50 / 75 / 100 / 150 / 200	1.0 / 1.2 / 1.5 / 2.0	MG / HDG / AL / SS	Cover Type
AFTR- 1C (ST) - 400 / H	400	50 / 75 / 100 / 150 / 200	1.0 / 1.2 / 1.5 / 2.0	MG / HDG / AL / SS	
AFTR- 1C (ST) - 450 / H	450	50 / 75 / 100 / 150 / 200	1.0 / 1.2 / 1.5 / 2.0	MG / HDG / AL / SS	Screw Fix Easy lock Ventilated/ louvered
AFTR- 1C (ST) - 500 / H	500	50 / 75 / 100 / 150 / 200	1.0 / 1.2 / 1.5 / 2.0	MG / HDG / AL / SS	
AFTR- 1C (ST) - 600 / H	600	50 / 75 / 100 / 150 / 200	1.0 / 1.2 / 1.5 / 2.0	MG / HDG / AL / SS	

Ordering Guide

AFTR- 1C (ST) (W) (H) (T) (F)

Item Type | Wdth | Heigh | Thickness | Finish

Example :

AFTR-1(ST) - 200-50-1.5-2.44-HDG

CABLE TRUNKING - 2 COMPARTMENTS FOR RAISED FLOOR AND CEILING

TYPE : AFTR- 2

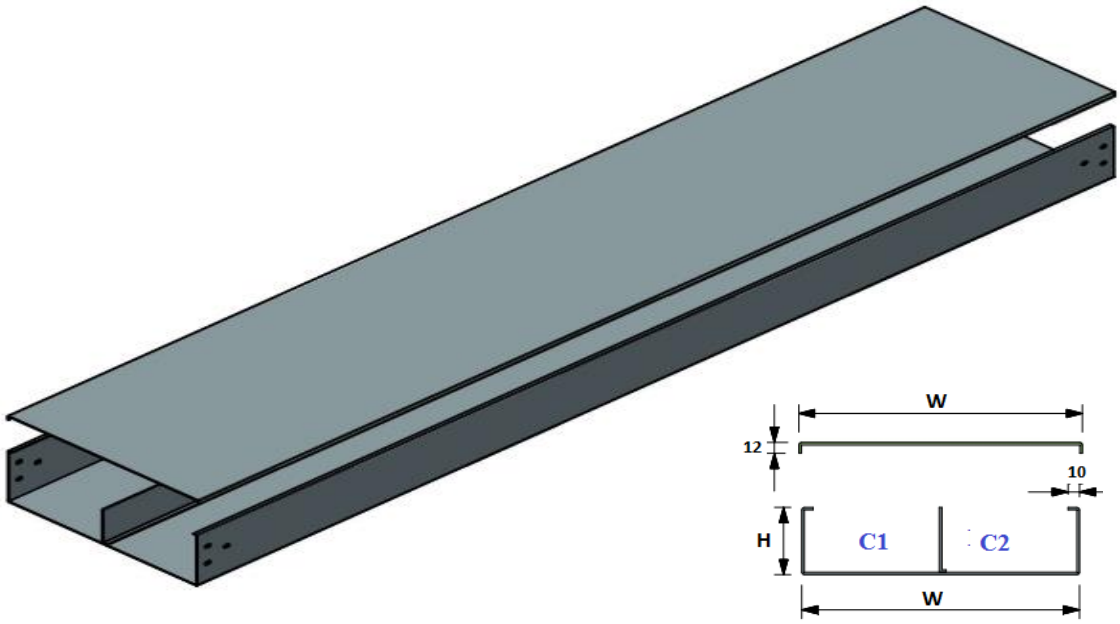

Item Code/ Part No.	Width(W) (mm)	Height (H) (mm)	Thickness (T) (mm)	Finish (F)	Length(L) (Mtr)
AFTR- 2C (ST) - 50 / H	50	50	1.0 / 1.2 / 1.5 / 2.0	MG / HDG / AL / SS	2.44 3.00
AFTR- 2C (ST) - 75 / H	75	50 / 75	1.0 / 1.2 / 1.5 / 2.0	MG / HDG / AL / SS	
AFTR- 2C (ST) - 100 / H	100	50 / 75 / 100	1.0 / 1.2 / 1.5 / 2.0	MG / HDG / AL / SS	
AFTR- 2C (ST) - 150 / H	150	50 / 75 / 100 / 150	1.0 / 1.2 / 1.5 / 2.0	MG / HDG / AL / SS	
AFTR- 2C (ST) - 200 / H	200	50 / 75 / 100 / 150 / 200	1.0 / 1.2 / 1.5 / 2.0	MG / HDG / AL / SS	
AFTR- 2C (ST) - 300 / H	300	50 / 75 / 100 / 150 / 200	1.0 / 1.2 / 1.5 / 2.0	MG / HDG / AL / SS	Cover Type
AFTR- 2C (ST) - 400 / H	400	50 / 75 / 100 / 150 / 200	1.0 / 1.2 / 1.5 / 2.0	MG / HDG / AL / SS	
AFTR- 2C (ST) - 450 / H	450	50 / 75 / 100 / 150 / 200	1.0 / 1.2 / 1.5 / 2.0	MG / HDG / AL / SS	Screw Fix Easy lock Ventilated/ louvered
AFTR- 2C (ST) - 500 / H	500	50 / 75 / 100 / 150 / 200	1.0 / 1.2 / 1.5 / 2.0	MG / HDG / AL / SS	
AFTR- 2C (ST) - 600 / H	600	50 / 75 / 100 / 150 / 200	1.0 / 1.2 / 1.5 / 2.0	MG / HDG / AL / SS	

Ordering Guide

AFCL-2 (ST) — Item Type
(W) — Wdth
(H) — Height
(T) — Thickness
(F) — Fin
(C) — Compt.

Example :

AFTR-2(ST) - 200-50-1.5-2.44-HDG -2

CABLE TRUNKING - 3 COMPARTMENTS FOR RAISED FLOOR AND CEILING

TYPE : AFTR- 3

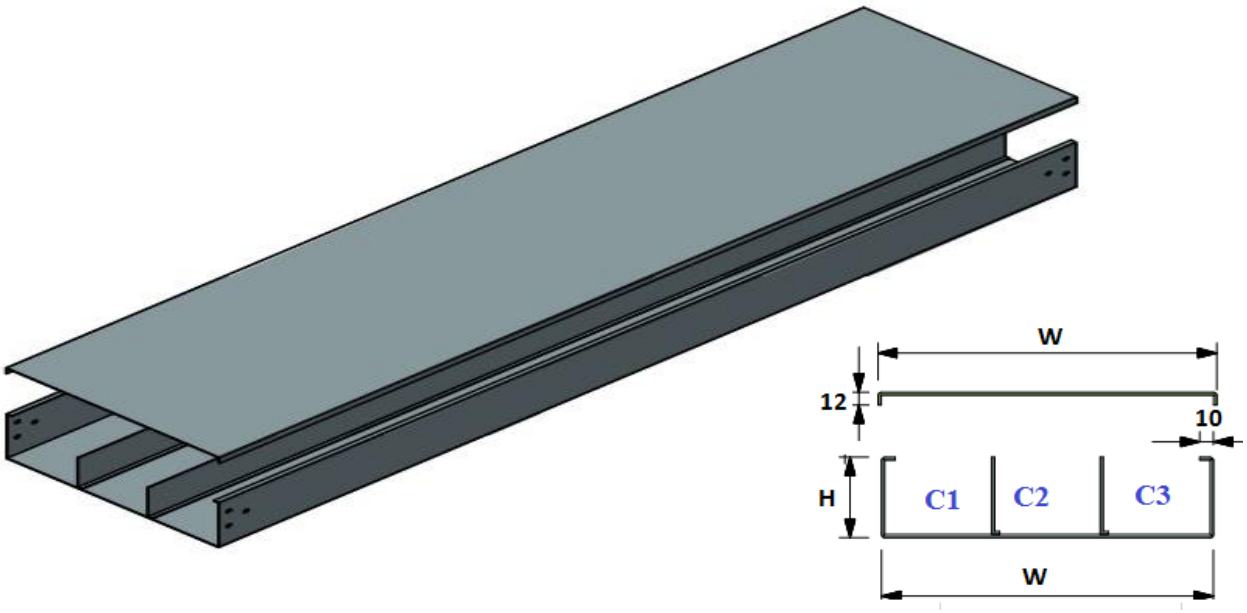

Item Code/ Part No.	Width(W) (mm)	Height (H) (mm)	Thickness (T) (mm)	Finish (F)	Length(L) (Mtr)
AFTR- 3C (ST) - 75 / H	75	50 / 75	1.0 / 1.2 / 1.5 / 2.0	MG / HDG / AL / SS	
AFTR- 3C (ST) - 100 / H	100	50 / 75 / 100	1.0 / 1.2 / 1.5 / 2.0	MG / HDG / AL / SS	
AFTR- 3C (ST) - 150 / H	150	50 / 75 / 100 / 150	1.0 / 1.2 / 1.5 / 2.0	MG / HDG / AL / SS	
AFTR- 3C (ST) - 200 / H	200	50 / 75 / 100 / 150 / 200	1.0 / 1.2 / 1.5 / 2.0	MG / HDG / AL / SS	
AFTR- 3C (ST) - 300 / H	300	50 / 75 / 100 / 150 / 200	1.0 / 1.2 / 1.5 / 2.0	MG / HDG / AL / SS	Cover Type
AFTR- 3C (ST) - 400 / H	400	50 / 75 / 100 / 150 / 200	1.0 / 1.2 / 1.5 / 2.0	MG / HDG / AL / SS	
AFTR- 3C (ST) - 450 / H	450	50 / 75 / 100 / 150 / 200	1.0 / 1.2 / 1.5 / 2.0	MG / HDG / AL / SS	Screw Fix
AFTR- 3C (ST) - 500 / H	500	50 / 75 / 100 / 150 / 200	1.0 / 1.2 / 1.5 / 2.0	MG / HDG / AL / SS	Easy lock
AFTR- 3C (ST) - 600 / H	600	50 / 75 / 100 / 150 / 200	1.0 / 1.2 / 1.5 / 2.0	MG / HDG / AL / SS	Ventilated/ louvered

Ordering Guide

AFCL-3 (ST) (W) (H) (T) (L) (F) (C)

Item Type Wdth Height Thickness Le Fin Compt.

Example :

AFTR-3(ST) - 200-50-1.5-2.44-HDG -3

90o Horizontal Bend/Elbow - Cover on Top

Standard Type

Part No. AFTR - T1 (90 HB) - TP

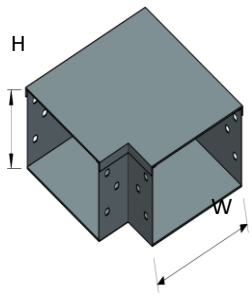

Gusset Type

Part No. AFTR - T2 (90HB) TP

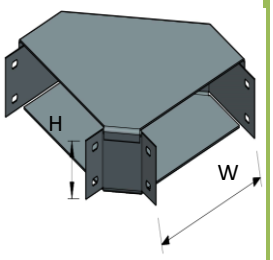

Item Code / Part No.	Width (W)	Height (H)	Thickness (T)	Finish (F)
AFTR - T1/T2 (90HB) - 50/H	50	50	1.0/1.2/1.5/2.0	MG HDG ALU. SS PC
AFTR - T1/T2 (90HB) - 75/H	75	50/75/100/150	1.0/1.2/1.5/2.0	
AFTR - T1/T2 (90HB) - 100/H	100	50/75/100/150	1.0/1.2/1.5/2.0	
AFTR - T1/T2 (90HB) - 150/H	150	50/75/100/150	1.0/1.2/1.5/2.0	
AFTR - T1/T2 (90HB) - 200/H	200	50/75/100/150	1.0/1.2/1.5/2.0	Compt. (C)
AFTR - T1/T2 (90HB) - 250/H	250	50/75/100/150	1.0/1.2/1.5/2.0	
AFTR - T1/T2 (90HB) - 300/H	300	50/75/100/150	1.0/1.2/1.5/2.0	1
AFTR - T1/T2 (90HB) - 400/H	400	50/75/100/150	1.0/1.2/1.5/2.0	2
AFTR - T1/T2 (90HB) - 450/H	450	50/75/100/150	1.0/1.2/1.5/2.0	3
AFTR - T1/T2 (90HB) - 500/H	500	50/75/100/150	1.0/1.2/1.5/2.0	4
AFTR - T1/T2 (90HB) - 600/H	600	50/75/100/150	1.0/1.2/1.5/2.0	5

Horizontal Tee - Cover on Top

Standard Type

Part No. AFTR - T1 (HT) - TP

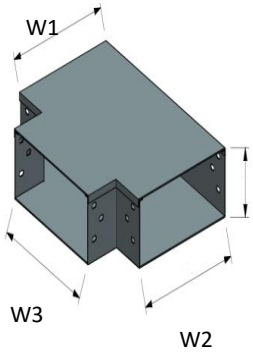

Gusset Type

Part No. AFTR - T2 (HT) TP

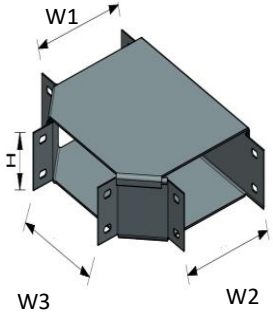

Item Code / Part No.	Width (W)	Height (H)	Thickness (T)	Finish (F)
AFTR - T1/T2 (HT) - 50/H	50	50	1.0/1.2/1.5/2.0	MG HDG ALU. SS PC
AFTR - T1/T2 (HT) - 75/H	75	50/75/100/150	1.0/1.2/1.5/2.0	
AFTR - T1/T2 (HT) - 100/H	100	50/75/100/150	1.0/1.2/1.5/2.0	
AFTR - T1/T2 (HT) - 150/H	150	50/75/100/150	1.0/1.2/1.5/2.0	
AFTR - T1/T2 (HT) - 200/H	200	50/75/100/150	1.0/1.2/1.5/2.0	Compt. (C)
AFTR - T1/T2 (HT) - 250/H	250	50/75/100/150	1.0/1.2/1.5/2.0	
AFTR - T1/T2 (HT) - 300/H	300	50/75/100/150	1.0/1.2/1.5/2.0	1
AFTR - T1/T2 (HT) - 400/H	400	50/75/100/150	1.0/1.2/1.5/2.0	2
AFTR - T1/T2 (HT) - 450/H	450	50/75/100/150	1.0/1.2/1.5/2.0	3
AFTR - T1/T2 (HT) - 500/H	500	50/75/100/150	1.0/1.2/1.5/2.0	4
AFTR - T1/T2 (HT) - 600/H	600	50/75/100/150	1.0/1.2/1.5/2.0	5

Ordering Guide

AFTR - T1 (90 HB) (W) (H) (T) (F)

Item Type | Wdth | Height | Thickness | Finish

Example :

AFTR-T1(90 HB) - 200-50 -1.5 - HDG

90 D. Inside Riser - Cover on Inside

Standard Type

Part No. AFTR - T1 (90 IR) - CI

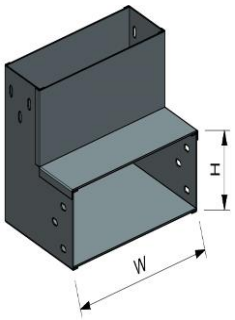

Gusset Type

Part No. AFTR - T2 (90 IR) CI

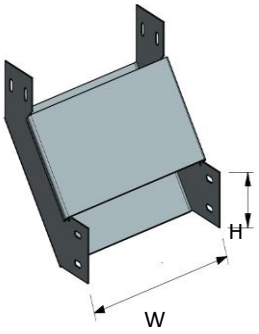

Item Code / Part No.	Width (W)	Height (H)	Thickness (T)	Finish (F)
AFTR - T1/T2 (90 IR) - 50/H	50	50	1.0/1.2/1.5/2.0	MG HDG ALU. SS PC
AFTR - T1/T2 (90 IR) - 75/H	75	50/75/100/150	1.0/1.2/1.5/2.0	
AFTR - T1/T2 (90 IR) - 100/H	100	50/75/100/150	1.0/1.2/1.5/2.0	
AFTR - T1/T2 (90 IR) - 150/H	150	50/75/100/150	1.0/1.2/1.5/2.0	
AFTR - T1/T2 (90 IR) - 200/H	200	50/75/100/150	1.0/1.2/1.5/2.0	Compt. (C)
AFTR - T1/T2 (90 IR) - 250/H	250	50/75/100/150	1.0/1.2/1.5/2.0	
AFTR - T1/T2 (90 IR) - 300/H	300	50/75/100/150	1.0/1.2/1.5/2.0	1
AFTR - T1/T2 (90 IR) - 400/H	400	50/75/100/150	1.0/1.2/1.5/2.0	2
AFTR - T1/T2 (90 IR) - 450/H	450	50/75/100/150	1.0/1.2/1.5/2.0	3
AFTR - T1/T2 (90 IR) - 500/H	500	50/75/100/150	1.0/1.2/1.5/2.0	4
AFTR - T1/T2 (90 IR) - 600/H	600	50/75/100/150	1.0/1.2/1.5/2.0	5

90 D. Outside Riser - Cover on Outside

Standard Type

Part No. AFTR - T1 (90 OR) - CO

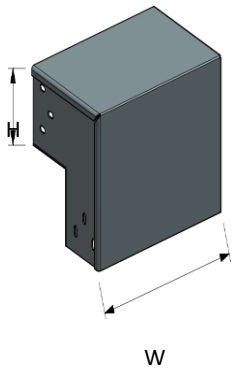

Gusset Type

Part No. AFTR - T2 (90 OR) CO

Item Code / Part No.	Width (W)	Height (H)	Thickness (T)	Finish (F)
AFTR - T1/T2 (90 OR) - 50/H	50	50	1.0/1.2/1.5/2.0	MG HDG ALU. SS PC
AFTR - T1/T2 (90 OR) - 75/H	75	50/75/100/150	1.0/1.2/1.5/2.0	
AFTR - T1/T2 (90 OR) - 100/H	100	50/75/100/150	1.0/1.2/1.5/2.0	
AFTR - T1/T2 (90 OR) - 150/H	150	50/75/100/150	1.0/1.2/1.5/2.0	
AFTR - T1/T2 (90 OR) - 200/H	200	50/75/100/150	1.0/1.2/1.5/2.0	Compt. (C)
AFTR - T1/T2 (90 OR) - 250/H	250	50/75/100/150	1.0/1.2/1.5/2.0	
AFTR - T1/T2 (90 OR) - 300/H	300	50/75/100/150	1.0/1.2/1.5/2.0	1
AFTR - T1/T2 (90 OR) - 400/H	400	50/75/100/150	1.0/1.2/1.5/2.0	2
AFTR - T1/T2 (90 OR) - 450/H	450	50/75/100/150	1.0/1.2/1.5/2.0	3
AFTR - T1/T2 (90 OR) - 500/H	500	50/75/100/150	1.0/1.2/1.5/2.0	4
AFTR - T1/T2 (90 OR) - 600/H	600	50/75/100/150	1.0/1.2/1.5/2.0	5

Ordering Guide

AFTR - T1 (90 IR) (W) (H) (T) (F)

Item Type Wdth Height Thickness Finish

Example :

AFTR-T1(90 IR) - 200-50 -1.5 - HDG

Horizontal Cross - Cover on Top

Standard Type

Part No. AFTR - T1 (HC) - TC

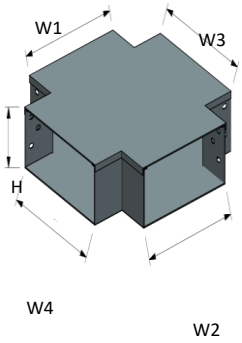

Gusset Type

Part No. AFTR - T2 (90 IR) TC

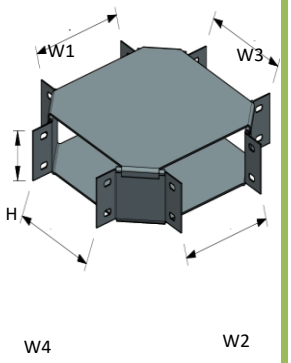

Item Code / Part No.	Width (W)	Height (H)	Thickness (T)	Finish (F)
AFTR - T1/T2 (HC) - 50/H	50	50	1.0/1.2/1.5/2.0	MG HDG ALU. SS PC
AFTR - T1/T2 (90 HC) - 75/H	75	50/75/100/150	1.0/1.2/1.5/2.0	
AFTR - T1/T2 (90 HC) - 100/H	100	50/75/100/150	1.0/1.2/1.5/2.0	
AFTR - T1/T2 (90 HC) - 150/H	150	50/75/100/150	1.0/1.2/1.5/2.0	
AFTR - T1/T2 (90 HC) - 200/H	200	50/75/100/150	1.0/1.2/1.5/2.0	Compt. (C)
AFTR - T1/T2 (90 HC) - 250/H	250	50/75/100/150	1.0/1.2/1.5/2.0	
AFTR - T1/T2 (90 HC) - 300/H	300	50/75/100/150	1.0/1.2/1.5/2.0	1
AFTR - T1/T2 (90 HC) - 400/H	400	50/75/100/150	1.0/1.2/1.5/2.0	2
AFTR - T1/T2 (90 HC) - 450/H	450	50/75/100/150	1.0/1.2/1.5/2.0	3
AFTR - T1/T2 (90 HC) - 500/H	500	50/75/100/150	1.0/1.2/1.5/2.0	4
AFTR - T1/T2 (90 HC) - 600/H	600	50/75/100/150	1.0/1.2/1.5/2.0	5

Reducers - Top Cover

Part No.
AFTR T1 (W1-W2) /H

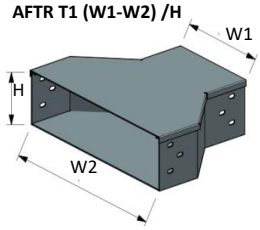

Part No.
AFTR T2 (W1-W2) /H

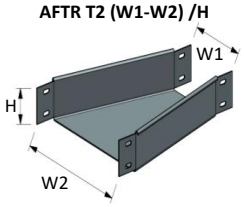

Item Code / Part No.	Width (W1)	Height (H)	Thickness (T)	Finish (F)
AFTR - T1/T2 (W1-W2)/H	100	50/75/100/150	1.0/1.2/1.5/2.0	MG HDG ALU. SS PC
	150	50/75/100/150	1.0/1.2/1.5/2.0	
	200	50/75/100/150	1.0/1.2/1.5/2.0	
	250	50/75/100/150	1.0/1.2/1.5/2.0	
	300	50/75/100/150	1.0/1.2/1.5/2.0	
	400			
	500			
	600			

45° Horizontal Bend/Elbow - Top Cover

Standard Type

Part No. AFTR - T1 (45 HB) - TP

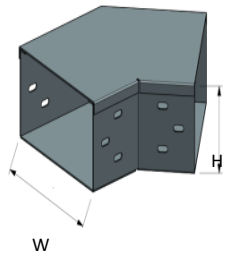

Gusset Type

Part No. AFTR - T2 (45HB) TP

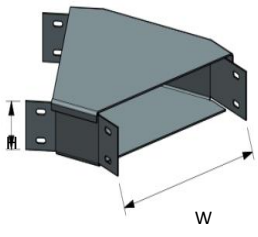

Item Code / Part No.	Width (W)	Height (H)	Thickness (T)	Finish (F)
AFTR - T1/T2 (45HB) - 50/H	50	50	1.0/1.2/1.5/2.0	MG HDG ALU. SS PC
AFTR - T1/T2 (45HB) - 75/H	75	50/75/100/150	1.0/1.2/1.5/2.0	
AFTR - T1/T2 (45HB) - 100/H	100	50/75/100/150	1.0/1.2/1.5/2.0	
AFTR - T1/T2 (45HB) - 150/H	150	50/75/100/150	1.0/1.2/1.5/2.0	
AFTR - T1/T2 (45HB) - 200/H	200	50/75/100/150	1.0/1.2/1.5/2.0	Compt. (C)
AFTR - T1/T2 (45HB) - 250/H	250	50/75/100/150	1.0/1.2/1.5/2.0	
AFTR - T1/T2 (45HB) - 300/H	300	50/75/100/150	1.0/1.2/1.5/2.0	1
AFTR - T1/T2 (45HB) - 400/H	400	50/75/100/150	1.0/1.2/1.5/2.0	2
AFTR - T1/T2 (45HB) - 450/H	450	50/75/100/150	1.0/1.2/1.5/2.0	3
AFTR - T1/T2 (45HB) - 500/H	500	50/75/100/150	1.0/1.2/1.5/2.0	4
AFTR - T1/T2 (45HB) - 600/H	600	50/75/100/150	1.0/1.2/1.5/2.0	5

Ordering Guide

AFTR - T1(HC) , (W) (H) (T) (F)

Item Type | Wdth | Height | Thickness | Finish

Example :

AFTR-T1(HC) - 200-50 -1.5 - HDG

45° Inside Riser - Cover inside

Standard Type

Part No. AFTR - T1 (45 IR) - CI

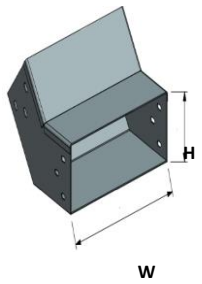

Gusset Type

Part No. AFTR - T2 (45 IR) CI

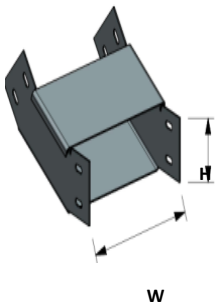

Item Code / Part No.	Width (W)	Height (H)	Thickness (T)	Finish (F)
AFTR - T1/T2 (45 IR) - 50/H	50	50	1.0/1.2/1.5/2.0	MG HDG ALU. SS PC
AFTR - T1/T2 (45 IR) - 75/H	75	50/75/100/150	1.0/1.2/1.5/2.0	
AFTR - T1/T2 (45 IR) - 100/H	100	50/75/100/150	1.0/1.2/1.5/2.0	
AFTR - T1/T2 (45 IR) - 150/H	150	50/75/100/150	1.0/1.2/1.5/2.0	
AFTR - T1/T2 (45 IR) - 200/H	200	50/75/100/150	1.0/1.2/1.5/2.0	Compt. (C)
AFTR - T1/T2 (45 IR) - 250/H	250	50/75/100/150	1.0/1.2/1.5/2.0	
AFTR - T1/T2 (45 IR) - 300/H	300	50/75/100/150	1.0/1.2/1.5/2.0	1
AFTR - T1/T2 (45 IR) - 400/H	400	50/75/100/150	1.0/1.2/1.5/2.0	2
AFTR - T1/T2 (45 IR) - 450/H	450	50/75/100/150	1.0/1.2/1.5/2.0	3
AFTR - T1/T2 (45 IR) - 500/H	500	50/75/100/150	1.0/1.2/1.5/2.0	4
AFTR - T1/T2 (45 IR) - 600/H	600	50/75/100/150	1.0/1.2/1.5/2.0	5

45° Outside Riser - Cover Outside

Standard Type

Part No. AFTR - T1 (45 OR) - CO

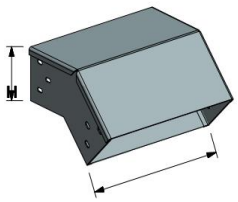

Gusset Type

Part No. AFTR - T2 (45 OR) CO

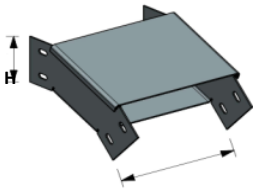

Item Code / Part No.	Width (W)	Height (H)	Thickness (T)	Finish (F)
AFTR - T1/T2 (45 OR) - 50/H	50	50	1.0/1.2/1.5/2.0	MG HDG ALU. SS PC
AFTR - T1/T2 (45 OR) - 75/H	75	50/75/100/150	1.0/1.2/1.5/2.0	
AFTR - T1/T2 (45 OR) - 100/H	100	50/75/100/150	1.0/1.2/1.5/2.0	
AFTR - T1/T2 (45 OR) - 150/H	150	50/75/100/150	1.0/1.2/1.5/2.0	
AFTR - T1/T2 (45 OR) - 200/H	200	50/75/100/150	1.0/1.2/1.5/2.0	Compt. (C)
AFTR - T1/T2 (45 OR) - 250/H	250	50/75/100/150	1.0/1.2/1.5/2.0	
AFTR - T1/T2 (45 OR) - 300/H	300	50/75/100/150	1.0/1.2/1.5/2.0	1
AFTR - T1/T2 (45 OR) - 400/H	400	50/75/100/150	1.0/1.2/1.5/2.0	2
AFTR - T1/T2 (45 OR) - 450/H	450	50/75/100/150	1.0/1.2/1.5/2.0	3
AFTR - T1/T2 (45 OR) - 500/H	500	50/75/100/150	1.0/1.2/1.5/2.0	4
AFTR - T1/T2 (45 OR) - 600/H	600	50/75/100/150	1.0/1.2/1.5/2.0	5

Ordering Guide

AFTR - T1 (45 IR) (W) (H) (T) (F)

Item Type | Wdth | Height | Thickness | Finish

Example :

AFTR-T1(45 IR) - 200-50 -1.5 - HDG

Horizontal Offset

Cover on Top

Part No. AFTR - T1 (VOS) W-H1-H2

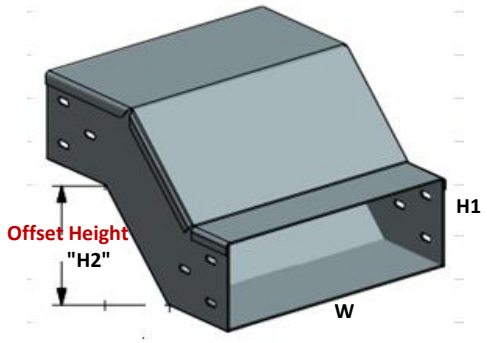

Item Code / Part No.	Trunking Width (W)	Trunking Height (H1)	Thickness (T)
AFTR - T1 (VOS) - W- H1 - H2	50	50 mm	1.0 mm
	75	75 mm	1.2 mm
	100	100 mm	1.5 mm
	150	150 mm	2.0 mm
	200	**Offset Height (H2)**	**Finish (F)**
	250		
	300	50 mm	MG
	400	75 mm	HDG
	450	100 mm	ALU.
	500	150 mm	SS
	600	200 mm	PC

Horizontal Offset

Cover on Top

Part No. AFTR - T1 (HOS) W-H1-H2

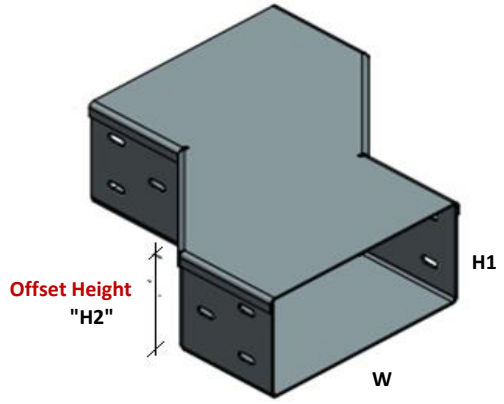

Item Code / Part No.	Trunking Width (W)	Trunking Height (H1)	Thickness (T)
AFTR - T1 (HOS) - W- H1 - H2	50	50 mm	1.0 mm
	75	75 mm	1.2 mm
	100	100 mm	1.5 mm
	150	150 mm	2.0 mm
	200	150 mm	2.0 mm
	250	**Offset Height (H2)**	**Finish (F)**
	300		
	350	50 mm	MG
	450	75 mm	HDG
	450	100 mm	ALU.
	500	150 mm	SS
	600	200 mm	

Ordering Guide

AFTR - T1(VOS)	(W)	(H)	(T)	(F)	(H2)
Item Type	Wdth	Height	Thickness	Finish	O/H

Example :

AFTR- T1(VOS) - 200-50 -1.5 - HDG- 100

Standard Flat Connector

Part No. SC - AFTR - H

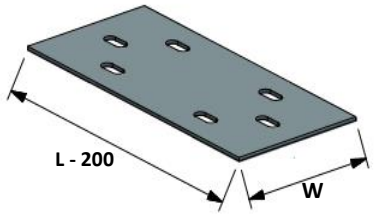

Part No./Item Type	Length	Thickness	Finish
SC - AFTR - 50H	100/180/200	1.0/1.2/1.5/2.0 mm	HDG
SC - AFTR - 60H	100/180/200	1.0/1.2/1.5/2.0 mm	MG
SC - AFTR - 75H	100/180/200	1.0/1.2/1.5/2.0 mm	ALU
SC - AFTR - 100H	100/180/200	1.0/1.2/1.5/2.0 mm	S/S
SC - AFTR - 150H	100/180/200	1.0/1.2/1.5/2.0 mm	PC
SC - AFTR - 200H	100/180/200	1.0/1.2/1.5/2.0 mm	

U - Connector

Part No. UC - AFTR - W - H

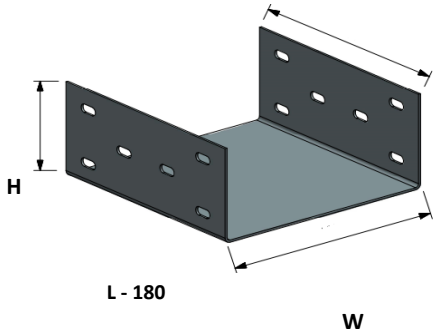

Item Code / Part No.	Height (H)	Thickness (T)
UC - AFTR - 50 W - H	50 mm	1.0 mm
UC - AFTR - 75 W x H	75 mm	1.2 mm
UC - AFTR - 100 Wx H	100 mm	1.5 mm
UC - AFTR - 150 W x H	150 mm	2.0 mm
UC - AFTR - 200 W x H	200 mm	
UC - AFTR - 250 W x H	**Length (L)**	**Finish (F)**
UC - AFTR - 300 W x H	100 mm 180 mm 200 mm	MG HDG ALU. SS PC
UC - AFTR - 400 W x H		
UC - AFTR - 450 W x H		
UC - AFTR - 500 W x H		
UC - AFTR - 600 W x H		

Part No. EC - AFTR - W- H

End Cap

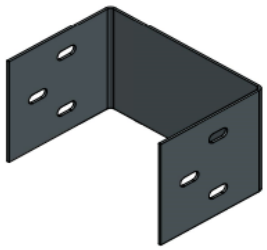

Part No. FC - AFTR - W - H

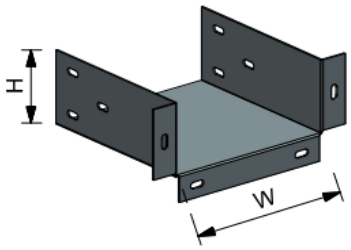

Part No. HGR - AFTR - W - H

Hanger

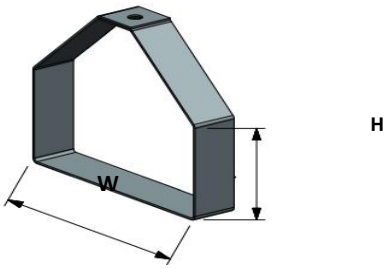

UNDER FLOOR CABLE TRUNKING (IN - SCREED TRUNKING)

TYPE : AF - UFTR

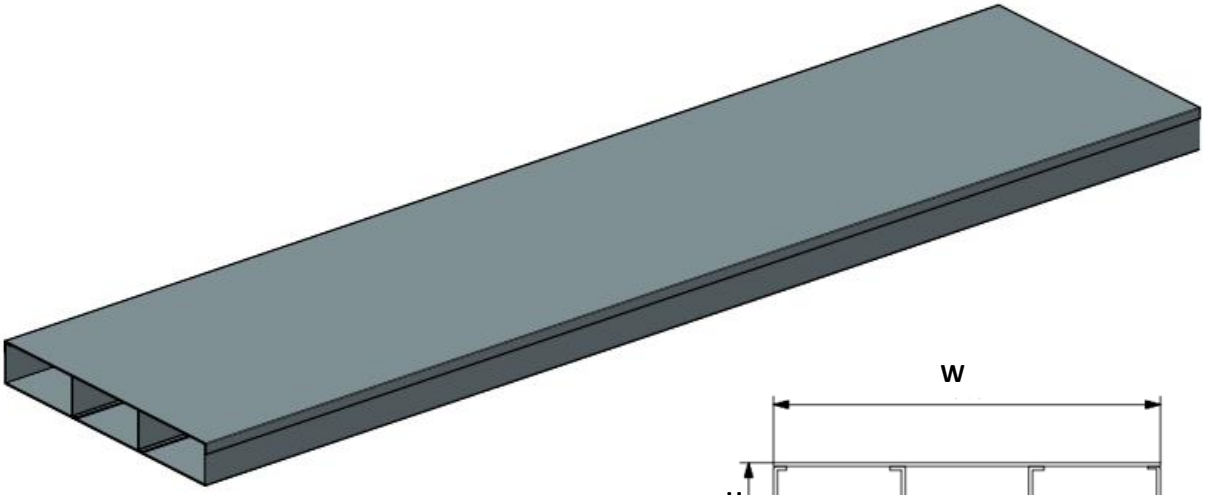

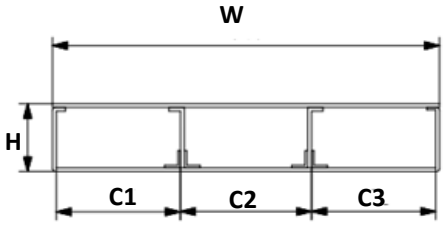

3 - Compartments

Item Code/ Part No.	Width (W)	Compartments (C)	Height (H)	Body Thickness (T_1)	Cover Thickness (T_2)
AF-UFTR(ST) - 150	150 mm	2C/ 3C (75 + 75)	28 mm 38 mm	1.2 mm	1.2 mm
AF-UFTR(ST) - 225	225 mm	3C (75 + 75+75)		1.5 mm	1.5 mm
AF-UFTR(ST) - 250	250 mm	3C (75 + 100+75)		2.0 mm	2.0 mm
AF-UFTR(ST) - 275	275 mm	3C (100 + 75+100)		3.0 mm	3.0 mm
AF-UFTR(ST) - 300	300 mm	3C (100 + 100+100)			
AF-UFTR(ST) - 325	325 mm	3C (110 + 105+110)	Length (L)	Finish (F)	
AF-UFTR(ST) - 400	400 mm	4C (100 + 100+ 100+100)	2.44 Mtr	MG : Mill Galvanized	
AF-UFTR(ST) - 406	406 mm	4C (102 + 101+ 101+102)	3.0 Mtr	HDG : Hot Dip Galvanized	

Ordering Guide

AF-UFTR(ST) (W) (C) (H) (T1/T2) (L) (F)

Item Type | Width | Compt. | Height | Thickness | Length | Finish

Example :

AF-UFTR - 300-3-38-1.2/1.5-MG

90° Vertical Riser Bend

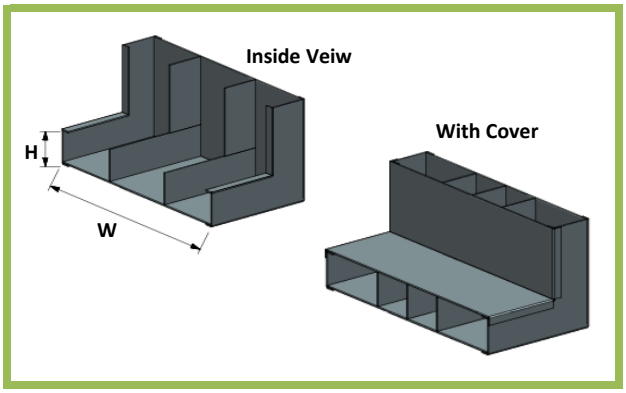

Item Code / Part No.	Width (W)	Height (H)	Finish (F)
AF-UFTR(90 RB) - 150	150 mm	28 mm 38 mm	MG HDG
AF-UFTR(90 RB) - 225	225 mm		
AF-UFTR(90 RB) - 250	250 mm		
AF-UFTR(90 RB) - 275	275 mm		
AF-UFTR(90 RB) - 300	300 mm	Thickness (T)	Compt.(C)
AF-UFTR(90 RB) - 325	325 mm	1.2 mm	1
AF-UFTR(90 RB) - 400	400 mm	1.5 mm	2
AF-UFTR(90 RB) - 406	406 mm	2.0 mm	3
		3.0 mm	4

90° Angle (Elbow)

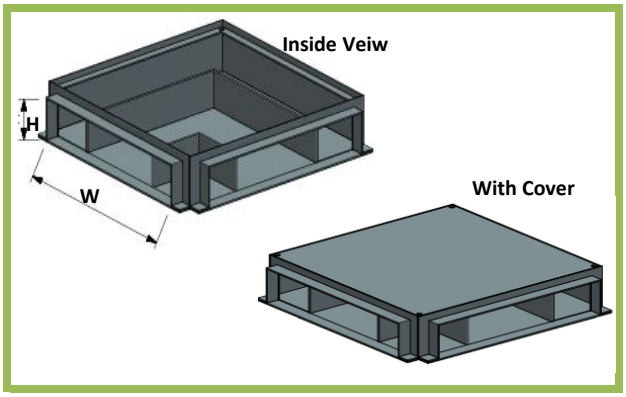

Item Code / Part No.	Width (W)	Height (H)	Finish (F)
AF-UFTR(90 HB) - 150	150 mm	28 mm 38 mm	MG HDG
AF-UFTR(90 HB) - 225	225 mm		
AF-UFTR(90 HB) - 250	250 mm		
AF-UFTR(90 HB) - 275	275 mm		
AF-UFTR(90 HB) - 300	300 mm	Thickness (T)	Compt.(C)
AF-UFTR(90 HB) - 325	325 mm	1.2 mm	1
AF-UFTR(90 HB) - 400	400 mm	1.5 mm	2
AF-UFTR(90 HB) - 406	406 mm	2.0 mm	3
		3.0 mm	4

2 - Way Junction Box

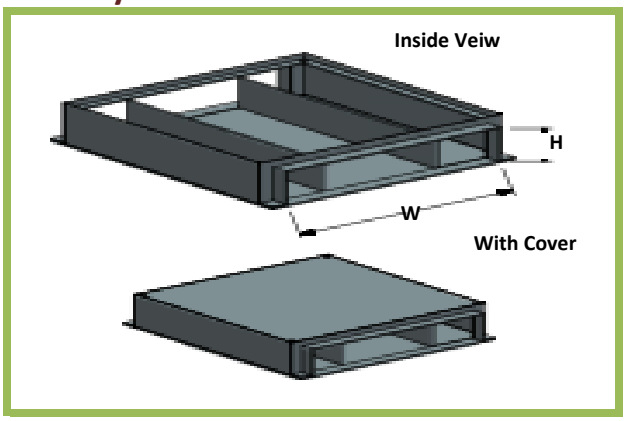

Item Code / Part No.	Width (W)	Height (H)	Finish (F)
AF-UFTR (2WJB) - 150	150 mm	28 mm 38 mm	MG HDG
AF-UFTR(2WJB) - 225	225 mm		
AF-UFTR(2WJB) - 250	250 mm		
AF-UFTR(2WJB) - 275	275 mm		
AF-UFTR(2WJB) - 300	300 mm	Thickness (T)	Compt.(C)
AF-UFTR(2WJB) - 325	325 mm	1.2 mm	1
AF-UFTR(2WJB) - 400	400 mm	1.5 mm	2
AF-UFTR(2WJB) - 406	406 mm	2.0 mm	3
		3.0 mm	4

3 - Way Junction Box

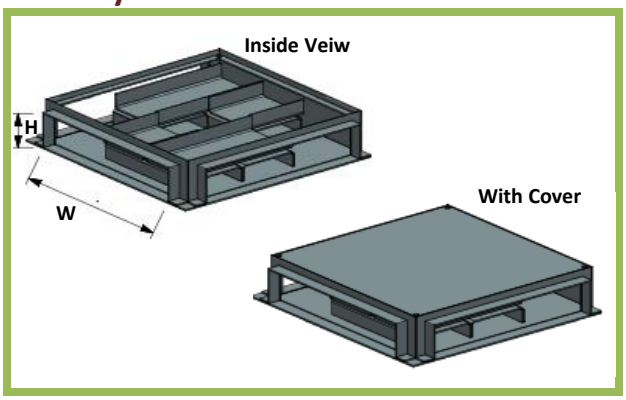

Item Code / Part No.	Width (W)	Height (H)	Finish (F)
AF-UFTR(3WJB) - 150	150 mm	28 mm 38 mm	MG HDG
AF-UFTR(3WJB) - 225	225 mm		
AF-UFTR(3WJB) - 250	250 mm		
AF-UFTR(3WJB) - 275	275 mm		
AF-UFTR(3WJB) - 300	300 mm	Thickness (T)	Compt.(C)
AF-UFTR(3WJB) - 325	325 mm	1.2 mm	1
AF-UFTR(3WJB) - 400	400 mm	1.5 mm	2
AF-UFTR(3WJB) - 406	406 mm	2.0 mm	3
		3.0 mm	4

4 - Way Junction Box

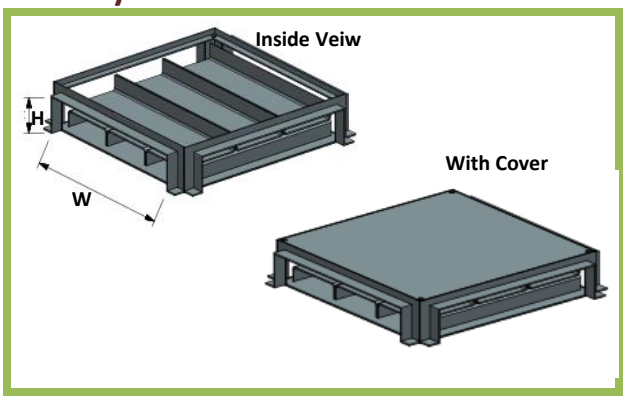

Item Code / Part No.	Width (W)	Height (H)	Finish (F)
AF-UFTR(4WJB) - 150	150 mm	28 mm 38 mm	MG HDG
AF-UFTR(4WJB) - 225	225 mm		
AF-UFTR(4WJB) - 250	250 mm		
AF-UFTR(4WJB) - 275	275 mm		
AF-UFTR(4WJB) - 300	300 mm	Thickness (T)	Compt.(C)
AF-UFTR(4WJB) - 325	325 mm	1.2 mm	1
AF-UFTR(4WJB) - 400	400 mm	1.5 mm	2
AF-UFTR(4WJB) - 406	406 mm	2.0 mm	3
		3.0 mm	4

4 Way Box For Trunking and Conduit

Item Code / Part No.	Width (W)	Height (H)	Finish (F)
AF- FB (4WFB) - 300	300 mm	28 mm 38 mm	MG HDG
AF-UFTR(4WJB) - 325	325 mm		
AF-UFTR(4WJB) - 400	400 mm		
AF-UFTR(4WJB) - 406	406 mm		
		Thickness (T)	Compt.(C)
		1.2 mm	1
		1.5 mm	2
		2.0 mm	3
		3.0 mm	4

Joint Fix Connector

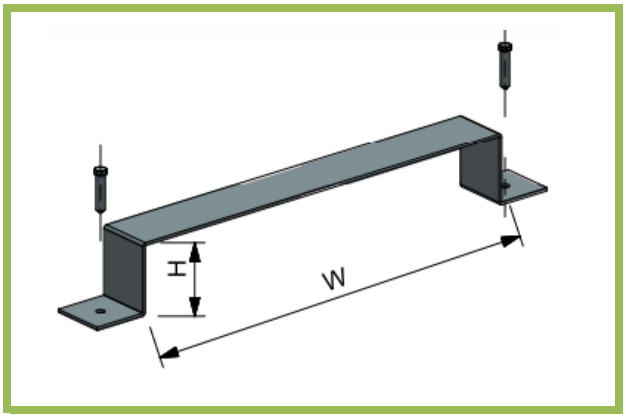

Item Code / Part No.	Width (W)	Height (H)	Finish (F)
AF-UFTR - JFC - 150	150 mm	28 mm	MG
AF-UFTR - JFC - 225	225 mm	38 mm	HDG
AF-UFTR - JFC - 250	250 mm	50 mm	
AF-UFTR - JFC - 275	275 mm	100 mm	
AF-UFTR - JFC - 300	300 mm	Thickness (T)	Compt.(C)
AF-UFTR - JFC - 325	325 mm	1.2 mm	1
AF-UFTR - JFC - 400	400 mm	1.5 mm	2
AF-UFTR - JFC - 406	406 mm	2.0 mm	3
		3.0 mm	4

Conduit Connector

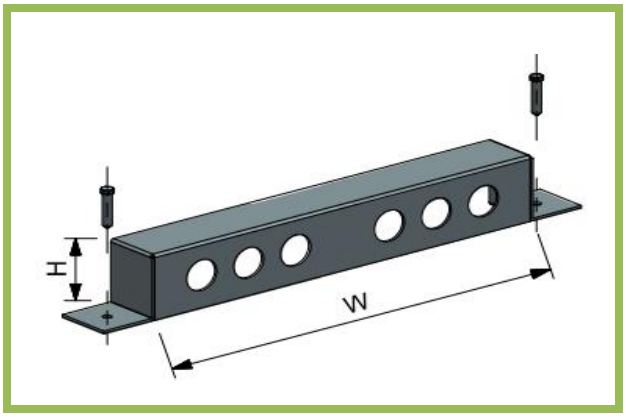

Item Code / Part No.	Width (W)	Height (H)	Finish (F)
AF-UFTR(90 RB) - 150	150 mm	28 mm	MG
AF-UFTR(90 RB) - 225	225 mm	38 mm	HDG
AF-UFTR(90 RB) - 250	250 mm	50 mm	
AF-UFTR(90 RB) - 275	275 mm	100 mm	
AF-UFTR(90 RB) - 300	300 mm	Thickness (T)	Compt.(C)
AF-UFTR(90 RB) - 325	325 mm	1.2 mm	1
AF-UFTR(90 RB) - 400	400 mm	1.5 mm	2
AF-UFTR(90 RB) - 406	406 mm	2.0 mm	3
		3.0 mm	4

End Cap

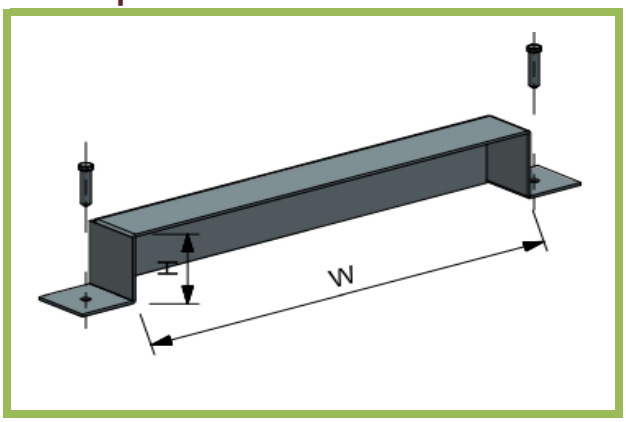

Item Code / Part No.	Width (W)	Height (H)	Finish (F)
AF-UFTR(90 RB) - 150	150 mm	28 mm	MG
AF-UFTR(90 RB) - 225	225 mm	38 mm	HDG
AF-UFTR(90 RB) - 250	250 mm	50 mm	
AF-UFTR(90 RB) - 275	275 mm	100 mm	
AF-UFTR(90 RB) - 300	300 mm	Thickness (T)	Compt.(C)
AF-UFTR(90 RB) - 325	325 mm	1.2 mm	1
AF-UFTR(90 RB) - 400	400 mm	1.5 mm	2
AF-UFTR(90 RB) - 406	406 mm	2.0 mm	3
		3.0 mm	4

FLUSH FLOOR CABLE TRUNKING (IN - SCREED TRUNKING)

Part No. AF - FFT(ST)

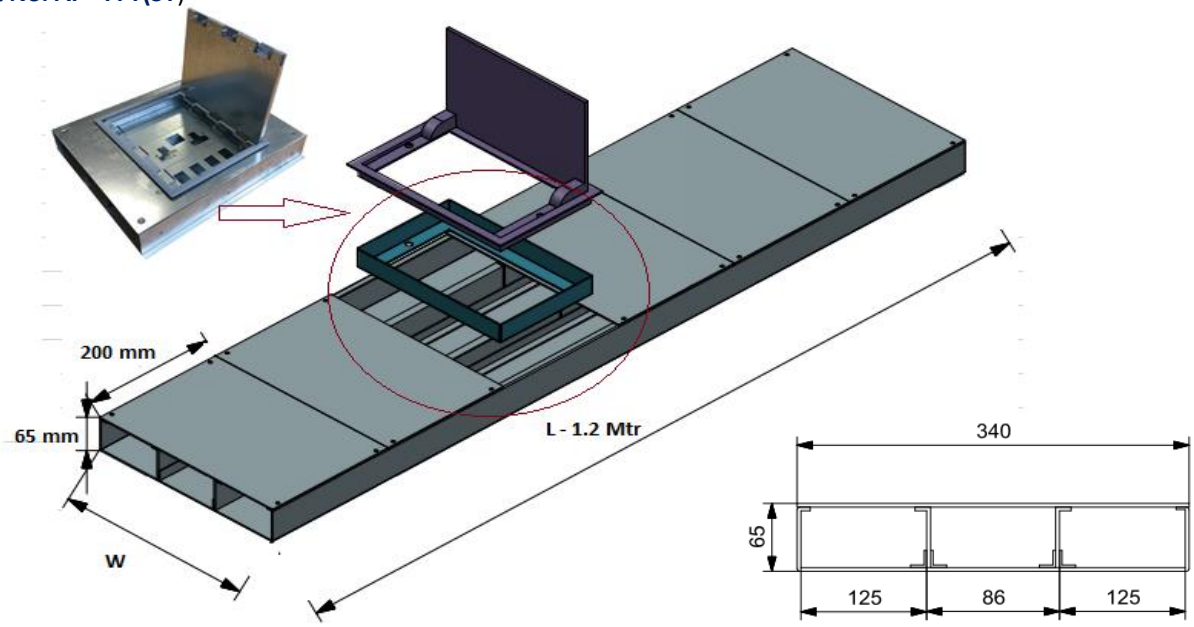

Item Code/ Part No.	Width (W)	Compartments (C)	Height (H)	Body Thickness (T1)	Cover Thickness (T2)
AF- FFT(ST) - 280	280 mm	3C (100 + 80 + 100)	65 mm	1.5 mm	3.0 mm
AF- FFT(ST) - 320	320 mm	3C (120 + 80 + 120)		2.0 mm	
AF- FFT(ST) - 340	340 mm	3C (127 + 86+127)			
			Length (L)	Finish (F)	
			1.2 Mtr	MG : Mill Galvanized	
			3.0 Mtr	HDG : Hot Dip Galvanized	

Ordering Guide

AF-FFT(ST) — Item Type
(W) — Width
(C) — Compt.
(H) — Height
(T1/T2) — Thickness
(L) — Length
(F) — Finish

Example :

AF-FFT - 340-3-65-2.0/3.0-1.2 - MG

2 - Way Junction box (Elbow)

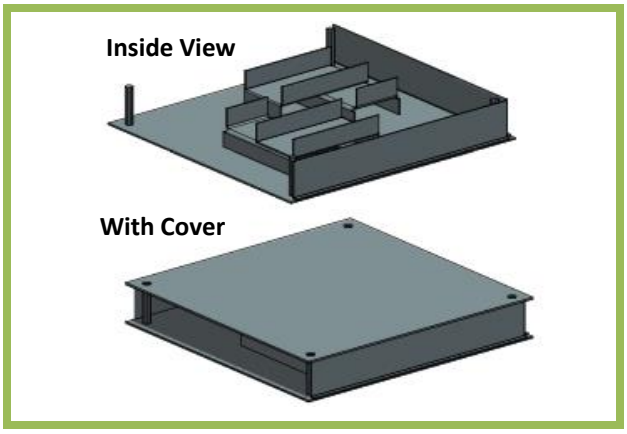

Item Code / Part No.	Width (W)	Height (H)	Finish (F)
AF-FFT(2W - JB) - 280	280	65	MG HDG
AF-FFT(2W - JB) - 320	320	75	
AF-FFT(2W - JB) - 340	340	85	
Body Thickness (T)	**Cover Thickness (T)**		**Compt.(C)**
1.5 mm	2 mm		3
2 mm	3 mm		

3 - Way Junction box (Tee)

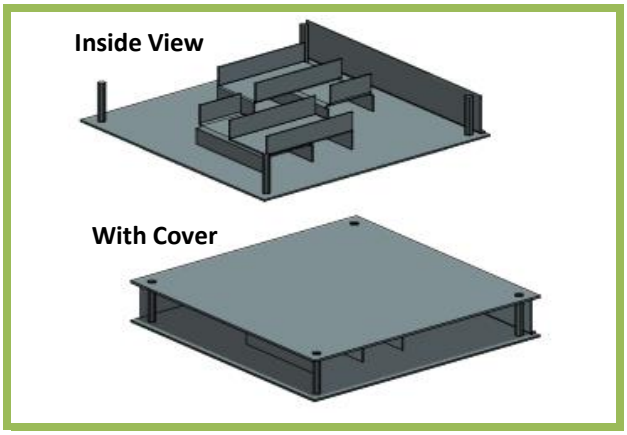

Item Code / Part No.	Width (W)	Height (H)	Finish (F)
AF-FFT(3W - JB) - 280	280	65	MG HDG
AF-FFT(3W - JB) - 320	320	75	
AF-FFT(3W - JB) - 340	340	85	
Body Thickness (T)	**Cover Thickness (T)**		**Compt.(C)**
1.5 mm	2 mm		3
2 mm	3 mm		

4 - Way Junction box (Cross)

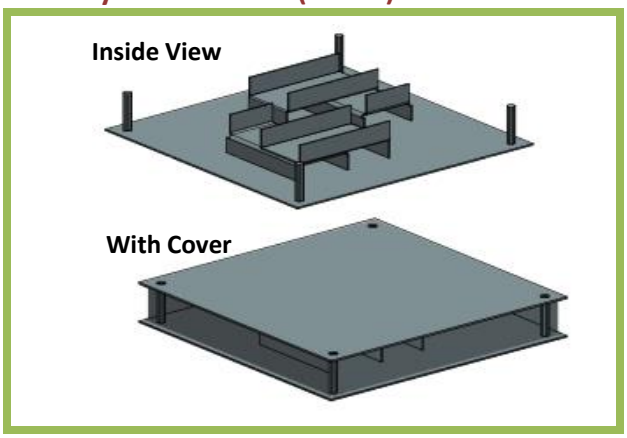

Item Code / Part No.	Width (W)	Height (H)	Finish (F)
AF-FFT(4W - JB) - 280	280	65	MG HDG
AF-FFT(4W - JB) - 320	320	75	
AF-FFT(4W - JB) - 340	340	85	
Body Thickness (T)	**Cover Thickness (T)**		**Compt.(C)**
1.5 mm	2 mm		3
2 mm	3 mm		

90° Riser Bend

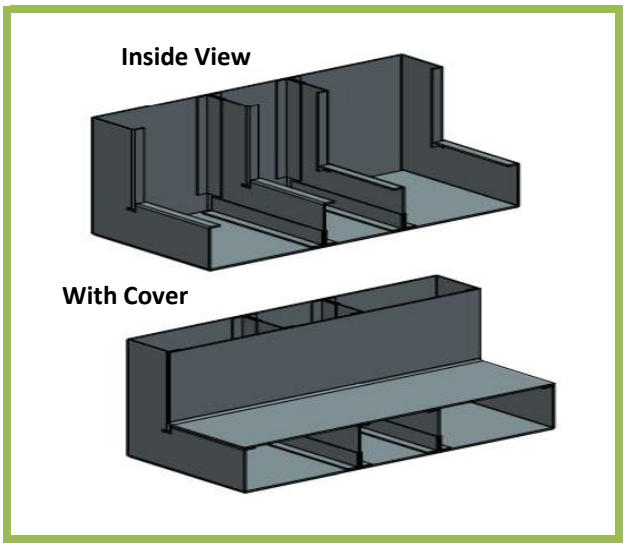

Item Code / Part No.	Width (W)	Height (H)	Finish (F)
AF-FFT(90 IR) - 280	280	65	MG HDG
AF-FFT(90 IR) - 320	320	75	
AF-FFT(90 IR) - 340	340	85	
Body Thickness (T)	**Cover Thickness (T)**		**Compt.(C)**
1.5 mm	2 mm		3
2 mm	3 mm		

Joint Connector

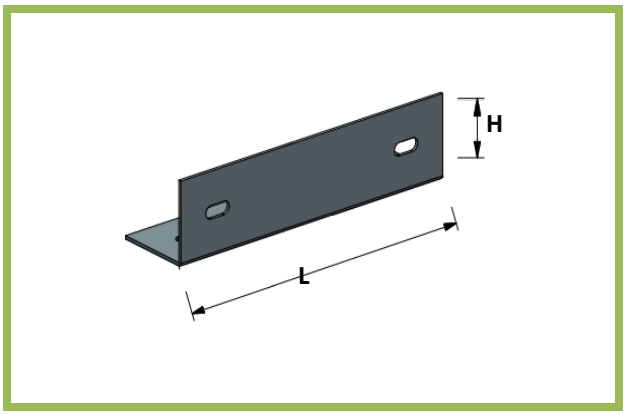

Item Code / Part No.	Length (L)	Height (H)	Finish (F)
AF-FFT(90 IR) - 280	200 mm	65 mm	MG HDG
AF-FFT(90 IR) - 320	Thickness(T)	75 mm	
AF-FFT(90 IR) - 340	1.5 mm	85 mm	
	2.0 mm		

End Cap for Flush Trunking

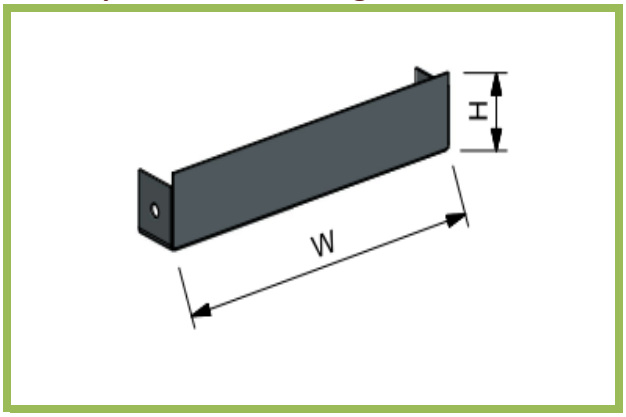

Item Code / Part No.	Length (L)	Height (H)	Finish (F)
AF-FFT(90 IR) - 280	200 mm	65 mm	MG HDG
AF-FFT(90 IR) - 320	Thickness(T)	75 mm	
AF-FFT(90 IR) - 340	1.5 mm	85 mm	
	2.0 mm		

FIOOR BOX **TYPE : AF - FB 1**	**Size : 270 mm W x 270 mm L x 80 mm H** **(Note : Other heights also available upon request)**

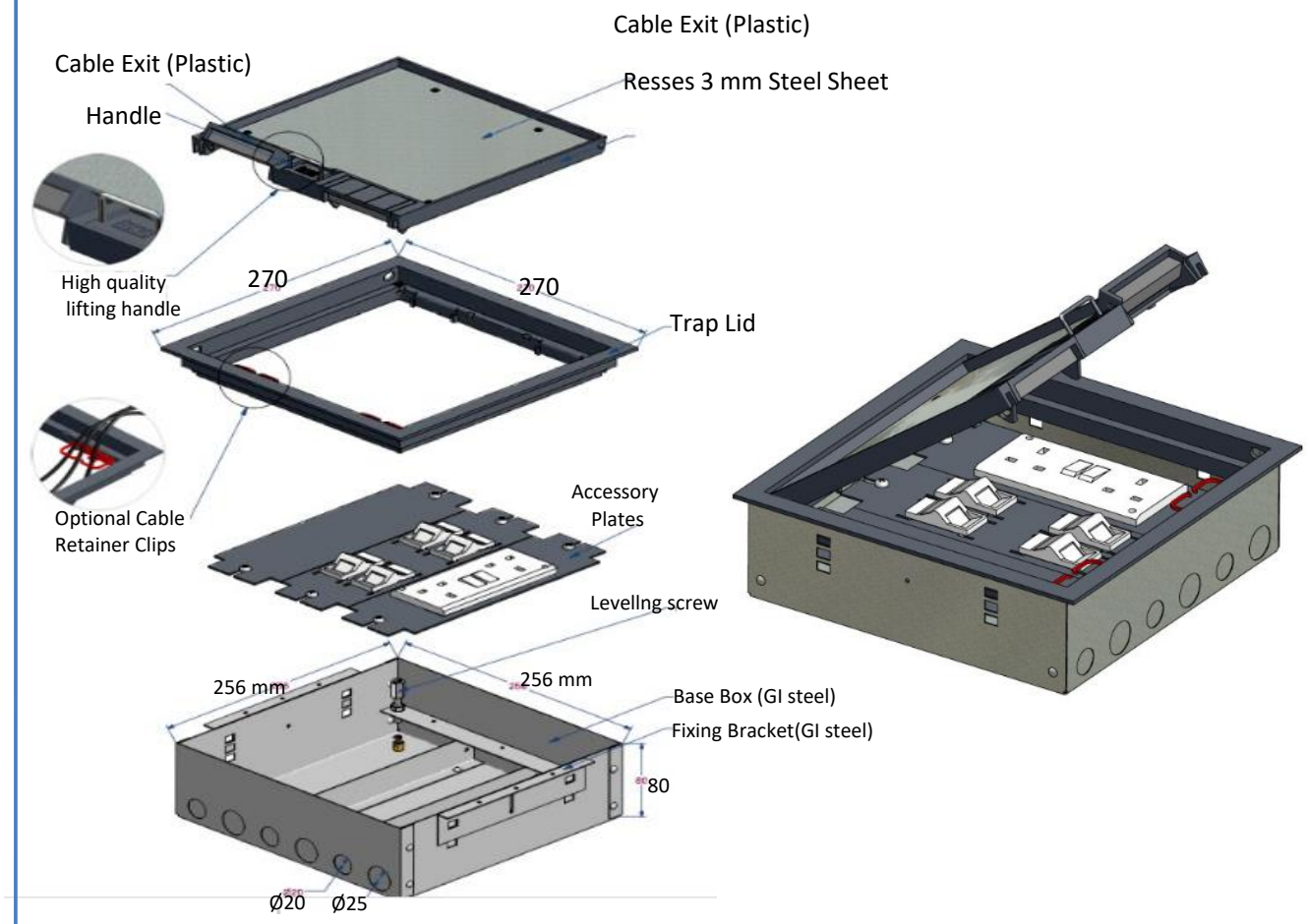

FIOOR BOX TYPE : AF - FB 2	Size : 220 mm W x 310 mm L x 65 mm H (Note : Other heights also available upon request)

FIOOR BOX TYPE : AF - FB 3	Size : 200 mm W x 340 mm L x 100 mm H (Note : Other heights also available upon request)

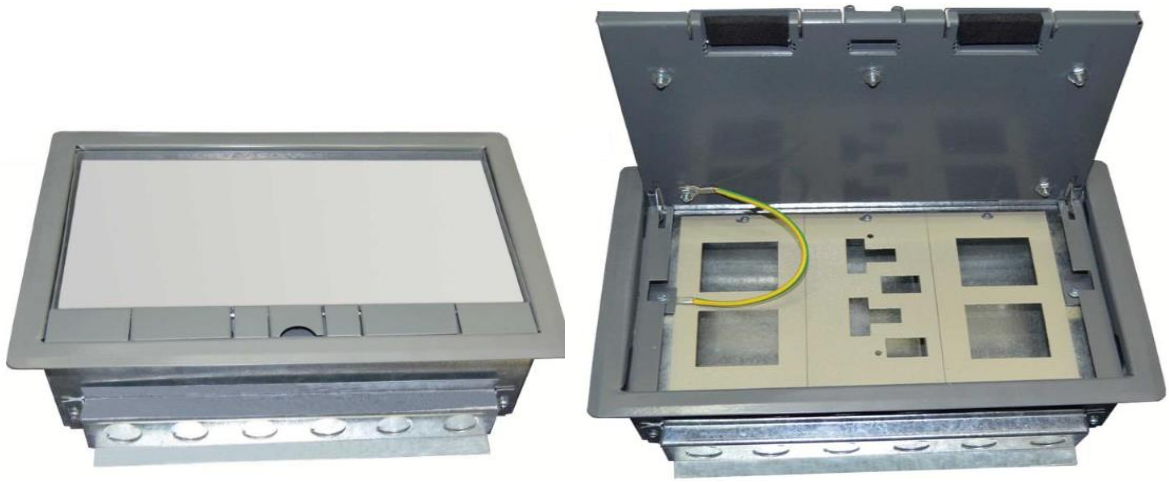

Channels and Supports

C - Channel
Post Bases
Angle Fittings
Brackets
Fasteners

C - Channel 41 x 41 mm

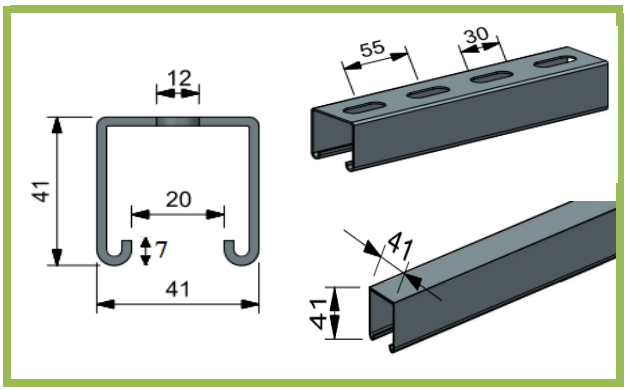

SLOTTED SINGLE CHANNEL (SSC)						
Part No / Item Code	Width	Height	Thickness	Length		Finish
SSC - 4141 - A	41 mm	41 mm	1.2 mm	3 M	6 M	HDG (Hot Dip Galv.)
SSC - 4141 - B	41 mm	41 mm	1.5 mm	3 M	6 M	
SSC - 4141 - C	41 mm	41 mm	2.0 mm	3 M	6 M	
SSC - 4141 - D	41 mm	41 mm	2.5 mm	3 M	6 M	
PLAIN SINGLE CHANNEL (PSC)						MG (Mill Galv.)
PSC - 4141 - A	41 mm	41 mm	1.2 mm	3 M	6 M	
PSC - 4141 - B	41 mm	41 mm	1.5 mm	3 M	6 M	
PSC - 4141 - C	41 mm	41 mm	2.0 mm	3 M	6 M	PC (Powder Coat)
PSC - 4141 - D	41 mm	41 mm	2.5 mm	3 M	6 M	

C - Channel 41 x 21 mm

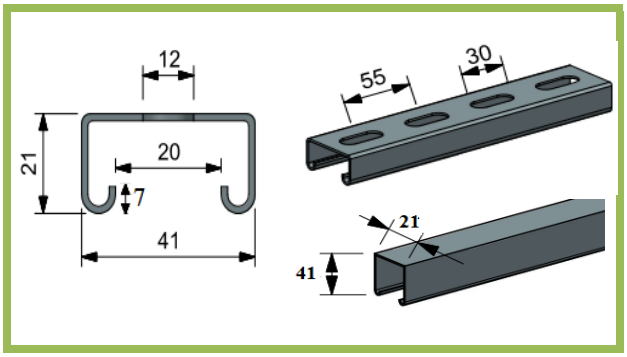

SLOTTED SINGLE CHANNEL(SSC)						
Part No / Item Code	Width	Height	Thickness	Length		Finish
SSC - 4121 - A	41 mm	21 mm	1.2 mm	3 M	6 M	HDG (Hot Dip Galv.)
SSC - 4121 - B	41 mm	21 mm	1.5 mm	3 M	6 M	
SSC - 4121 - C	41 mm	21 mm	2.0 mm	3 M	6 M	
SSC - 4121 - D	41 mm	21 mm	2.5 mm	3 M	6 M	
PLAIN SINGLE CHANNEL (PSC)						MG (Mill Galv.)
PSC - 4121 - A	41 mm	21 mm	1.2 mm	3 M	6 M	
PSC - 4121 - B	41 mm	21 mm	1.5 mm	3 M	6 M	
PSC - 4121 - C	41 mm	21 mm	2.0 mm	3 M	6 M	PC (Powder Coat)
PSC - 4121 - D	41 mm	21 mm	2.5 mm	3 M	6 M	

C - Channel Back to Back 82 x 41 mm

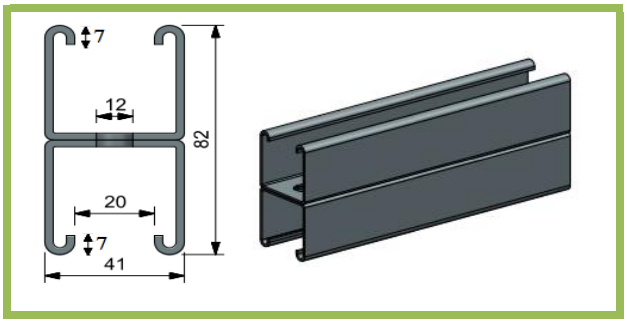

SLOTTED DOUBLE CHANNEL (SDC)						
Part No / Item Code	Width	Height	Thickness	Length		Finish
SBBC - 8241 - A	41 mm	41 mm	1.5 mm	3 M	6 M	HDG (Hot Dip Galv.)
SBBC - 8241 - B	41 mm	41 mm	2.0 mm	3 M	6 M	
SBBC - 8241 - C	41 mm	41 mm	2.5 mm	3 M	6 M	
PLAIN DOUBLE CHANNEL (PDC)						
PBBC - 8241 - A	41 mm	41 mm	1.5 mm	3 M	6 M	MG (Mill Galv.)
PBBC - 8241 - B	41 mm	41 mm	2.0 mm	3 M	6 M	
PBBC - 8241 - C	41 mm	41 mm	2.5 mm	3 M	6 M	PC

French Channel

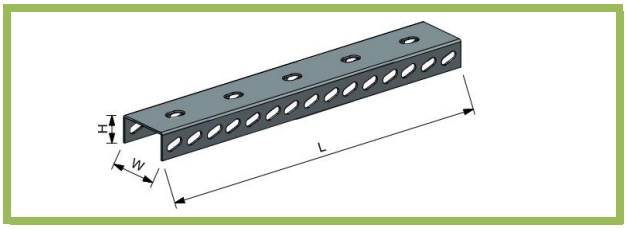

Part No.	Channel Size	Finish
FC - A	48 mm x 24 mm x 1.5 mm x 2.44 Mtr	HDG (Hot Dip Galvanized)
FC - B	48 mm x 24 mm x 1.5 mm x 3.0 Mtr	
FC - C	48 mm x 24 mm x 2.0 mm x 2.44 Mtr	MG (Mill Galvanized)
FC - D	48 mm x 24 mm x 2.0 mm x 3.0 Mtr	

Square Washer

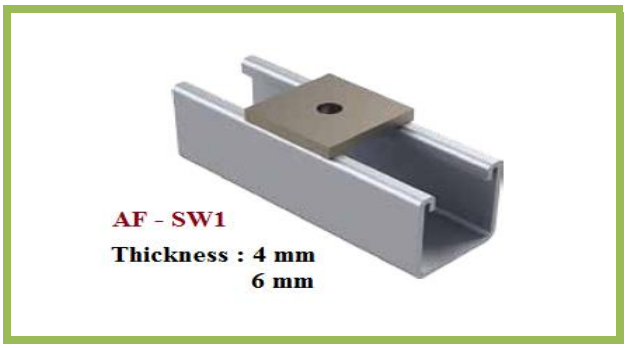

Flanged Washer

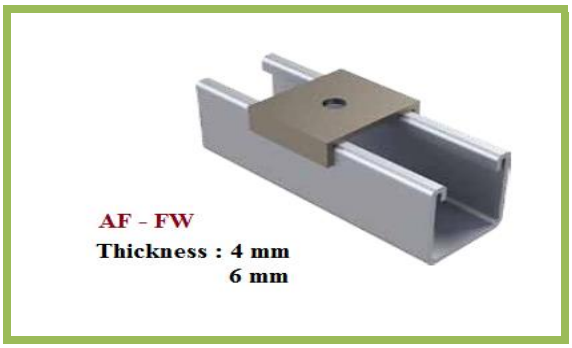

Double Hole Spliace Plate

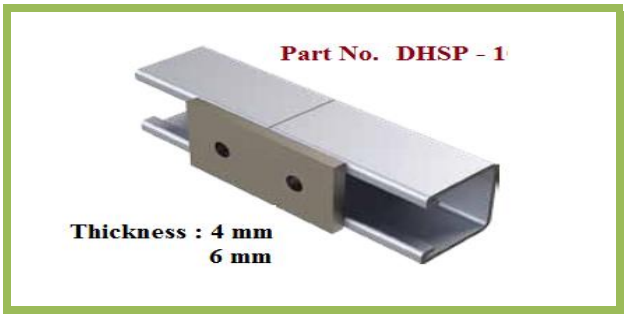

Triple Hole Spliace Plate

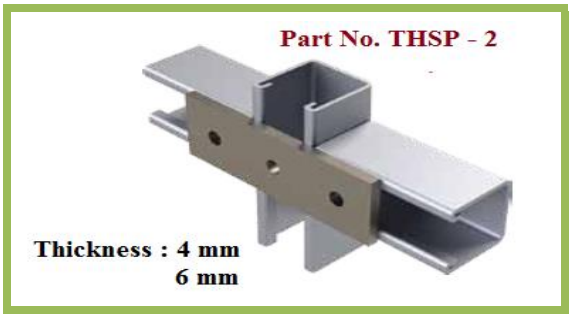

Three Hole Corner Plate

Four Hole Corner Plate

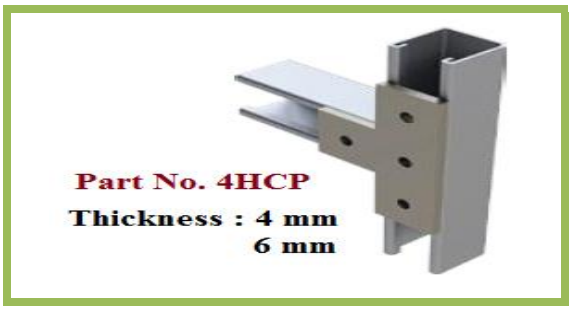

Five Hole Corner Plate

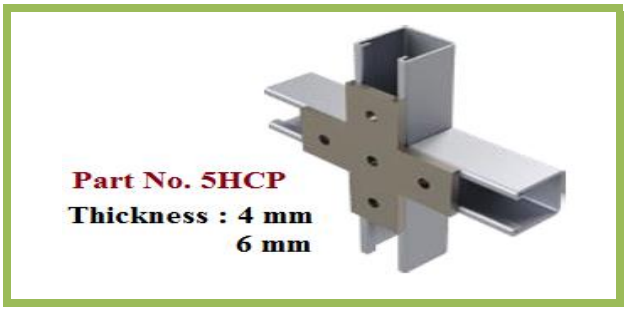

Four Hole Gusset Plate

2 Hole 90° Angle Fitting

3 Hole 90° Angle Fitting

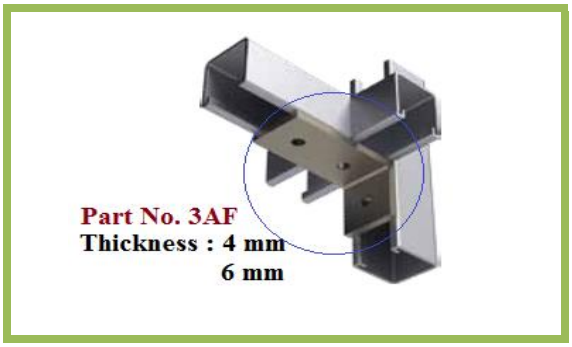

4 Hole 90° Angle Fitting

Universal Bracket Fitting

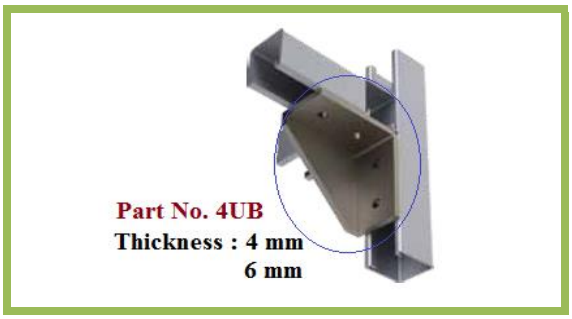

Omega Bracket clamp

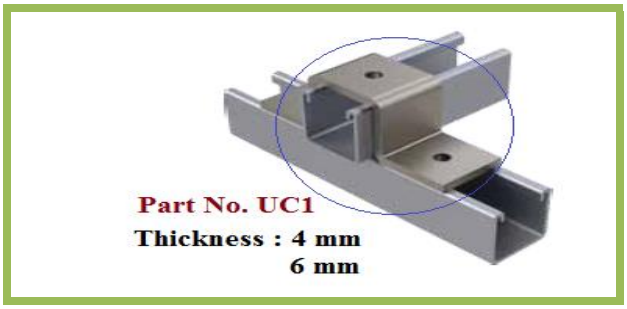

Channel Clamp

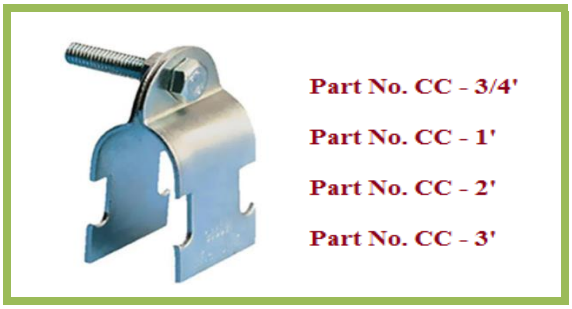

U - Connector Channel

Channel End Cap(PVC)

6 hole Post Base

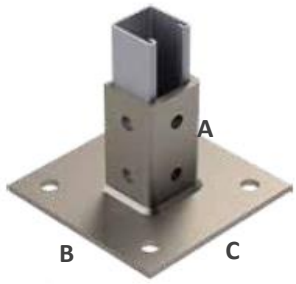

Part No. PB - S1

Thickness : 6 mm
A : 100 mm
B : 150 mm
C : 150 mm
Hole Size : 12 mm

6 hole Post Base

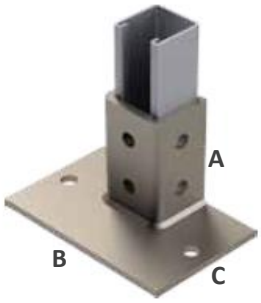

Part No. PB - S1

Thickness : 6 mm
A : 100 mm
B : 150 mm
C : 80 mm
Hole Size : 12 mm

c

3 hole Post Base

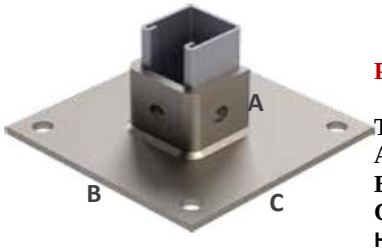

Part No. PB - S3

Thickness : 6 mm
A : 50 mm
B : 150 mm
C : 150 mm
Hole Size : 12 mm

3 hole Post Base

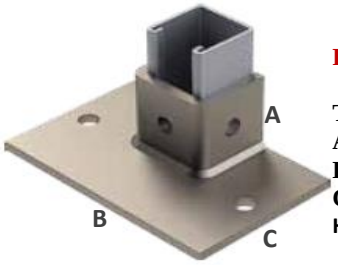

Part No. PB - S4

Thickness : 6 mm
A : 50 mm
B : 150 mm
C : 80 mm
Hole Size : 12 mm

6 hole Double Post Base

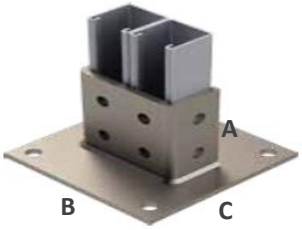

Part No. PB - D1

Thickness : 6 mm
A : 100 mm
B : 150 mm
C : 150 mm
Hole Size : 12 mm

6 hole Double Post Base

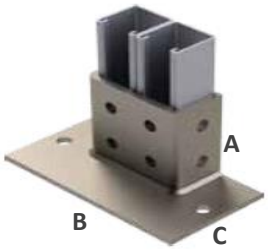

Part No. PB - D2

Thickness : 6 mm
A : 100 mm
B : 150 mm
C : 100 mm
Hole Size : 12 mm

3 hole Double Post Base

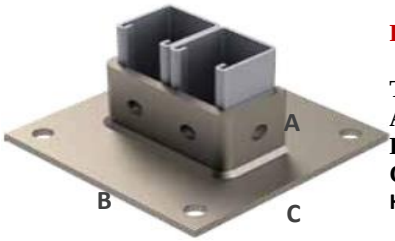

Part No. PB - D3

Thickness : 6 mm
A : 50 mm
B : 150 mm
C : 150 mm
Hole Size : 12 mm

3 hole Double Post Base

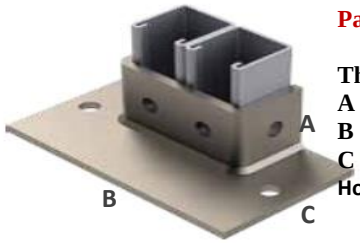

Part No. PB - D3

Thickness : 6 mm
A : 50 mm
B : 150 mm
C : 100 mm
Hole Size : 12 mm

Single Channel Bracket / Cantilever Arm

Part No. CB - S1

Channel Type : Plain
41x 41mm / 41 x 21 mm
Channel Thickness :
1.5 / 2.0 / 2.5 mm
Plate Thickness :
6 / 8 / 10 mm
Plate Size :
130 x 42 mm
Bolt size : 10 / 12 mm

Single Channel Bracket / Cantilever Arm

Part No. CB - S2

Channel Type : Slotted
41x 41mm / 41 x 21 mm
Channel Thickness :
1.5 / 2.0 / 2.5 mm
Plate Thickness :
6 / 8 / 10 mm
Plate Size :
130 x 42 mm
Bolt size : 10 / 12 mm

Double Channel Bracket / Cantilever Arm

Part No. CB - D1

Channel Type : Plain/slotted
82x 41mm / 42 x 41 mm
Channel Thickness :
1.5 / 2.0 / 2.5 mm
Plate Thickness :
6 / 8 / 10 mm
Plate Size :
130 x 42 mm
Bolt Size : 10 / 12 mm

Bracket - English Type

Part No. EB - D1

Bracket Thickness :
1.5 / 2.0 / 2.5 mm
Bolt Size : 10 / 12 mm

Bracket - French Type

Part No. FB - D1

Thickness : 1.2/1.5/2.0
Bracket Size :
CTG1 : 55 x 123 mm
CTG2 : 90 x 225 mm
CTG3 : 90 x 350 mm
CTG4 : 90 x 475 mm
CTG5 : 90 x 550 mm
CTG6 : 130 x 640 mm

Triangular Bracket - Flat Bar Type

Part No. TB- F1

Flat bar Thickness :
4 mm
6 mm
8 mm

Traingular bracket - Channel Type

Part No. PB - D3

Channel type
41 x 41 mm
Channel Thickness :
1.5 / 2.0 / 2.5 mm
Flat bar : 6 mm

Omega Bracket

Part No. OB - F1

Thickness :
2 mm
4 mm
6 mm
8 mm

Roofing Bolt

Part No. RB - S

Sizes :
M 6 x 16 mm
M 6 x 20 mm
M 8 x 20 mm
M 8 x 25 mm
M 8 x 30 mm

Carriage Bolt

Part No. CB - S

Sizes :
M6 x 16 mm
M6 x 20 mm
M8 x 20 mm
M8 x 25 mm
M8 x 30 mm

Hexagonal Nut

Part No. HN - S

Sizes :
M 6
M 8
M 10
M 12
M 14
M 16

Flanged Nut

Part No. FN - S

Sizes :

M 6

M 8

Flat Washer

Part No. FW - S

Sizes :
M 6
M 8
M 10
M 12
M 14
M16

Lock Washer

Part No. LW - S

Sizes :
M 6
M 8
M 10
M 12
M 14
M16

Machine Screw

Part No. MS - S

Sizes :	Length:
M 6	20
M 8	30
M 10	40
M 12	50
M 14	60
M 16	100

Hexagonal Bolt

Part No. HB - S

Sizes :	Length:
M 6	30
M 8	40
M 10	50
M 12	60
M 14	80
M 16	100

Threaded Rod

Part No. TR - S

Sizes :
M 6 x 3.0 Mtr
M 8 x 3.0 Mtr
M 10 x 3.0 Mtr
M 12 x 3.0 Mtr
M 14 x 3.0 Mtr
M16 x 3.0 Mtr

Threaded Rod Connector

Part No. TC - S

Sizes :
M 6
M 8
M 10
M 12
M 14
M16

Spring Nut

Part No. SN - S

Sizes :
M 6
M 8
M 10
M 12
M 14
M 16

Drop in Anchor / Steel Fisher

Part No. SF - S

Sizes :
M 6
M 8
M 10
M 12
M 14
M 16

Achor bolt

Part No. FW - S

Sizes :
M 6
M 8
M 10
M 12
M 14
M16

Square Washer

Part No. SW - S

Size :
40 x 40 mm
Hole Size:
8 mm
10 mm
12 mm
14 mm

Channel Clamp

Part No. CC - 3/4'

Part No. CC - 1'

Part No. CC - 2'

Part No. CC - 3'

Channel End Cap (Pvc)

Part No. EC - C

Size :
41 x 21 mm
41 x 41 mm